VTSQ672923

67" Acrylic Freestanding Tub with Drain

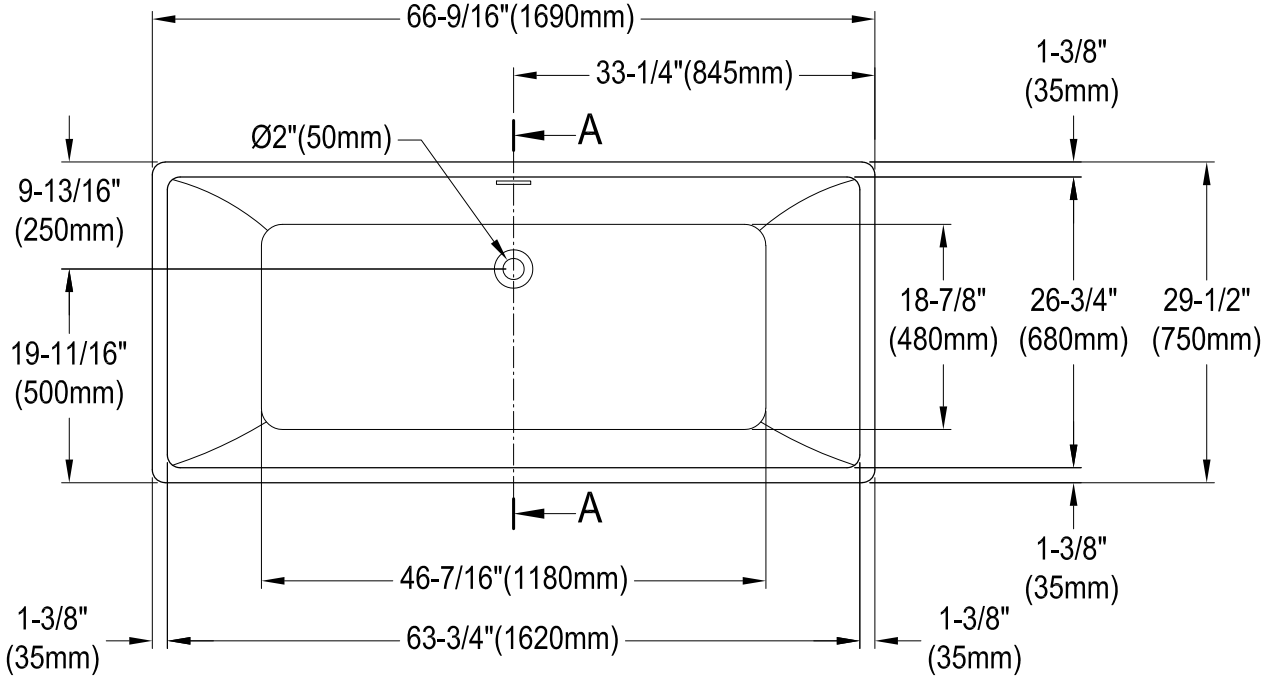

Drain Hole Size

Scale (3:1)

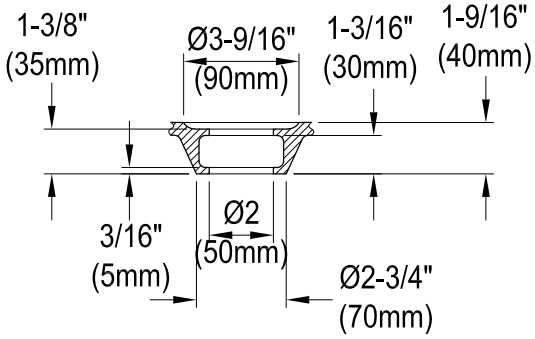

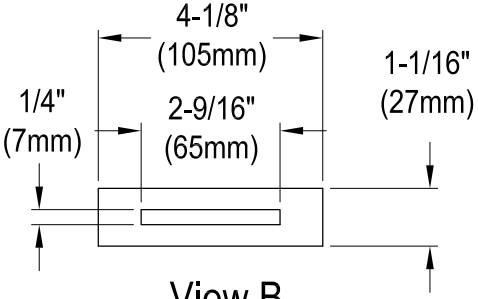

View B

Scale (5:1)

M14 x 100 (5 pcs)

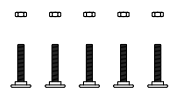

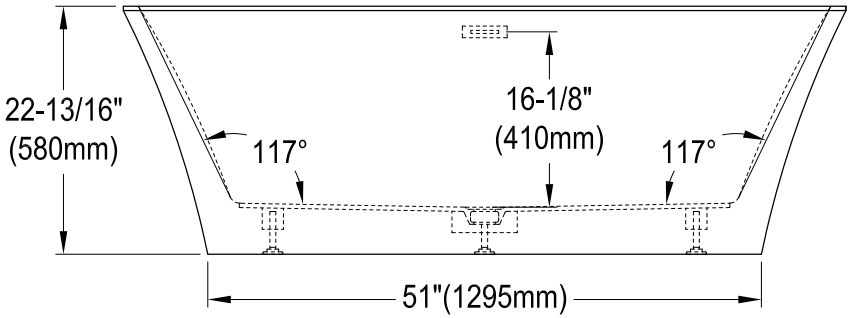

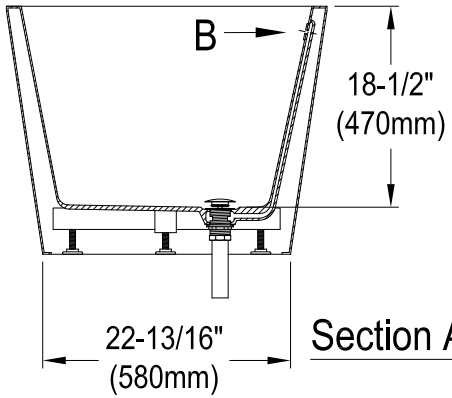

Section A-A