VCT7D663024

66" Ended Pedestal Tub With 7" Faucet Drillings

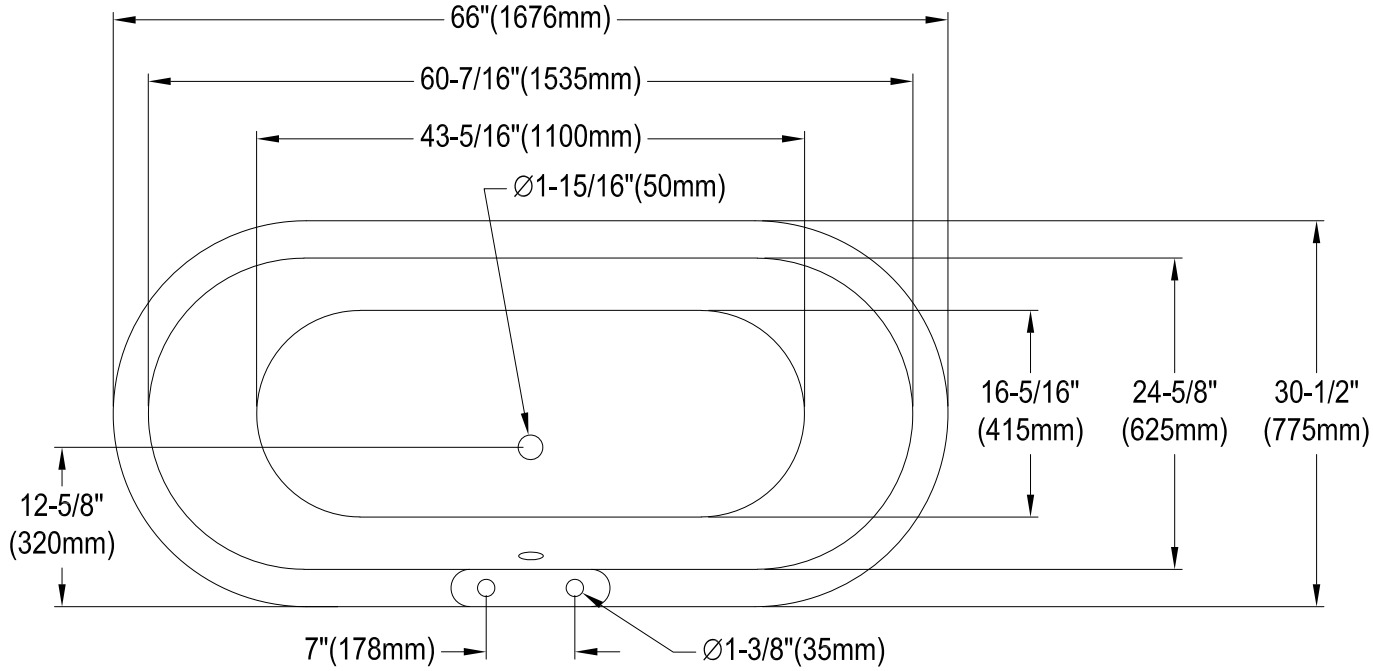

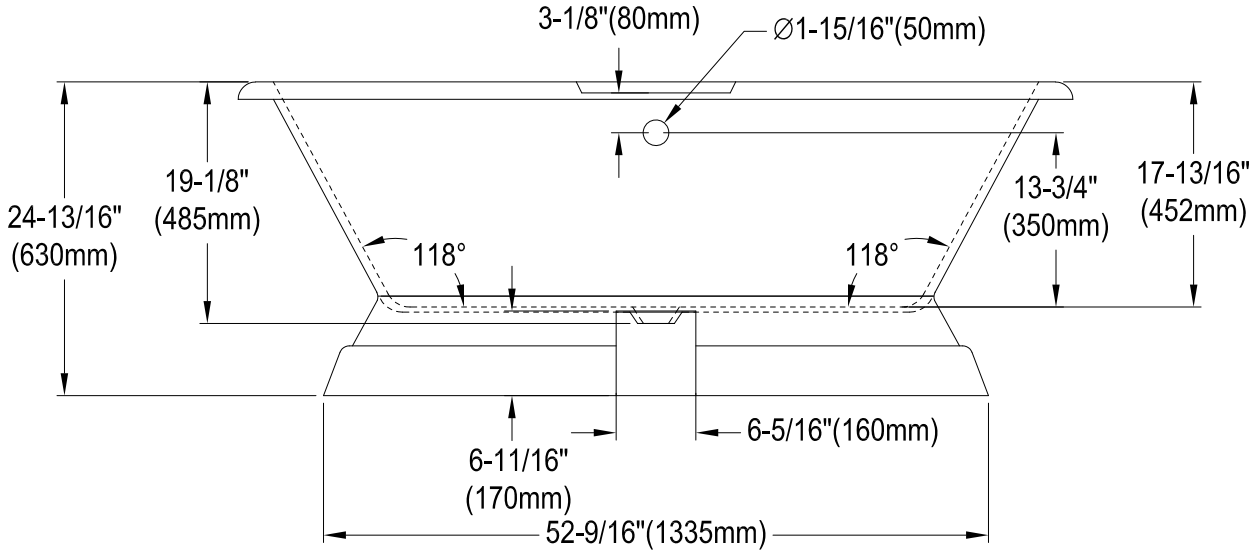

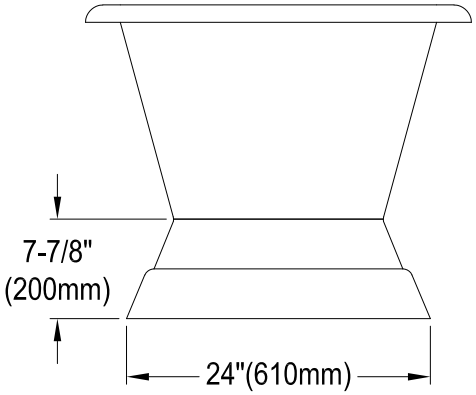

Ref# VCT7D663024 | 2019-08-A