KINGSTON

TO ORDER PARTS, CALL: 1-877-252-7277
www.kingstonbrass.com
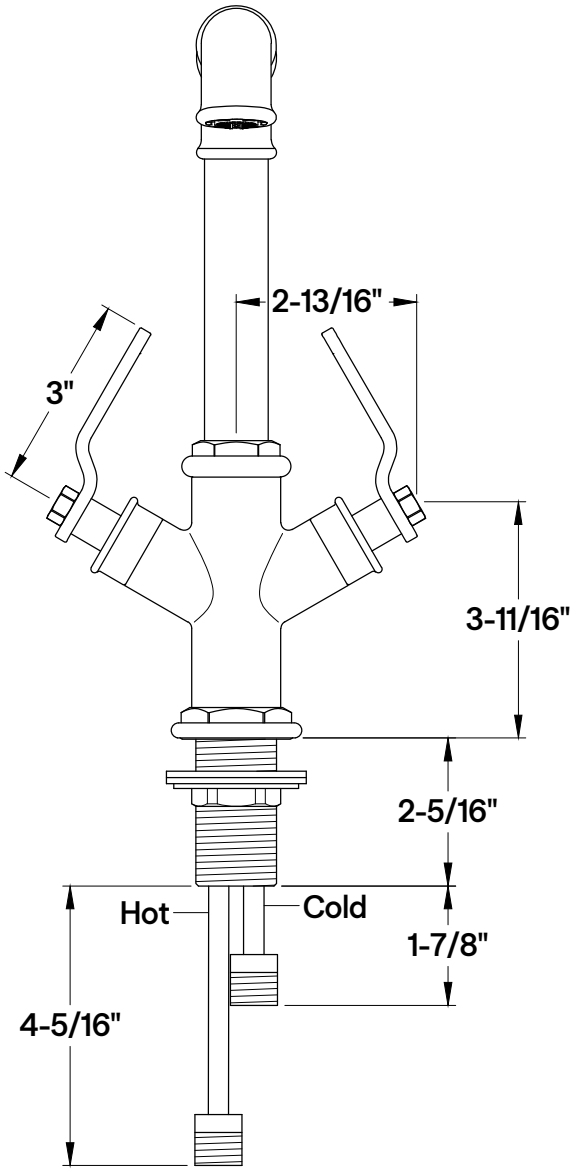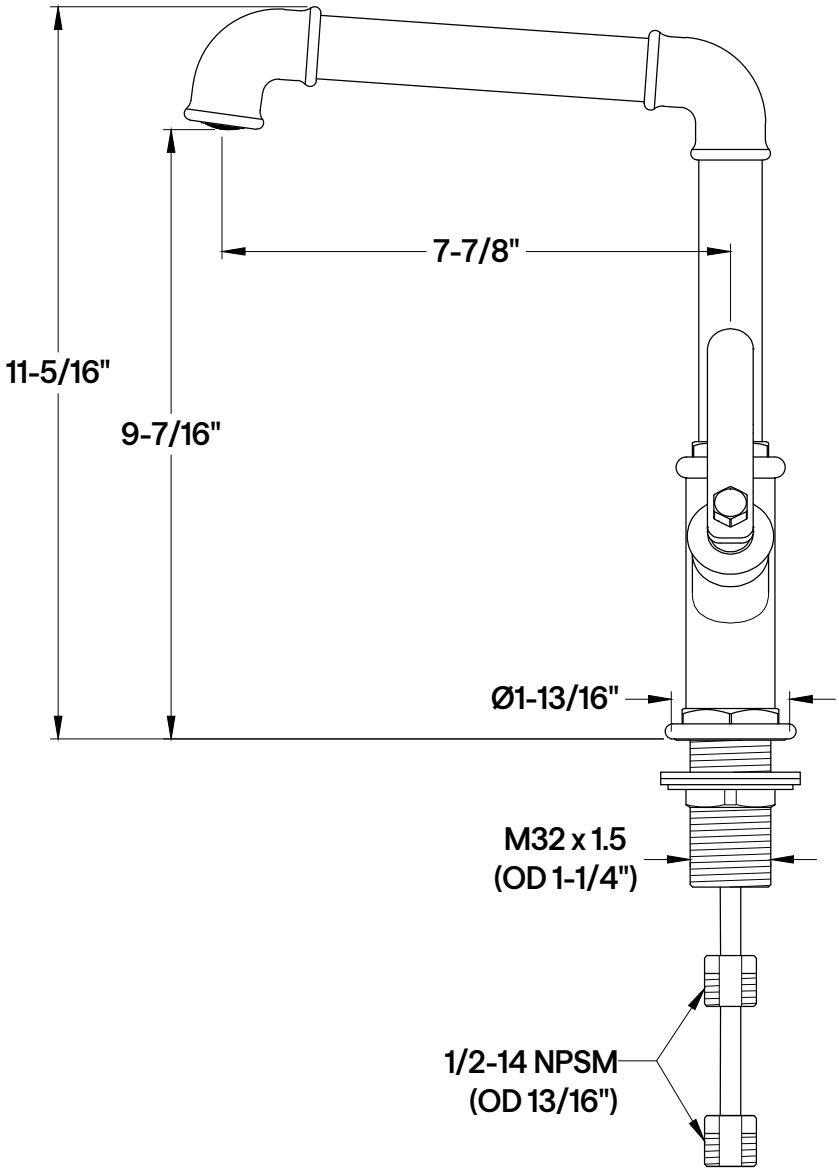
LS6500,1,3,8KL
Twin Handles Kitchen Faucet