KX1050,1,2,3,6,8BD

Hand Shower Kit

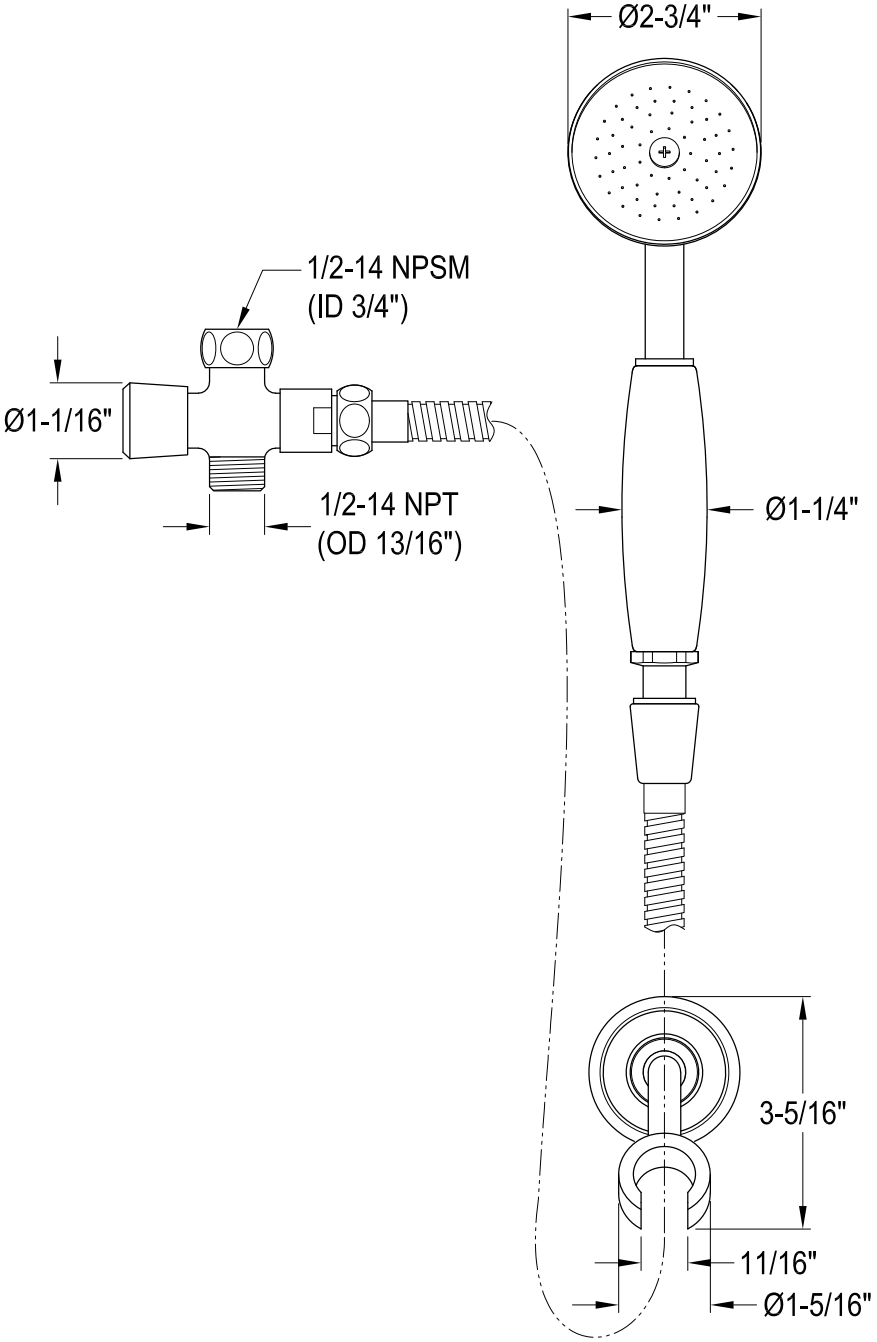

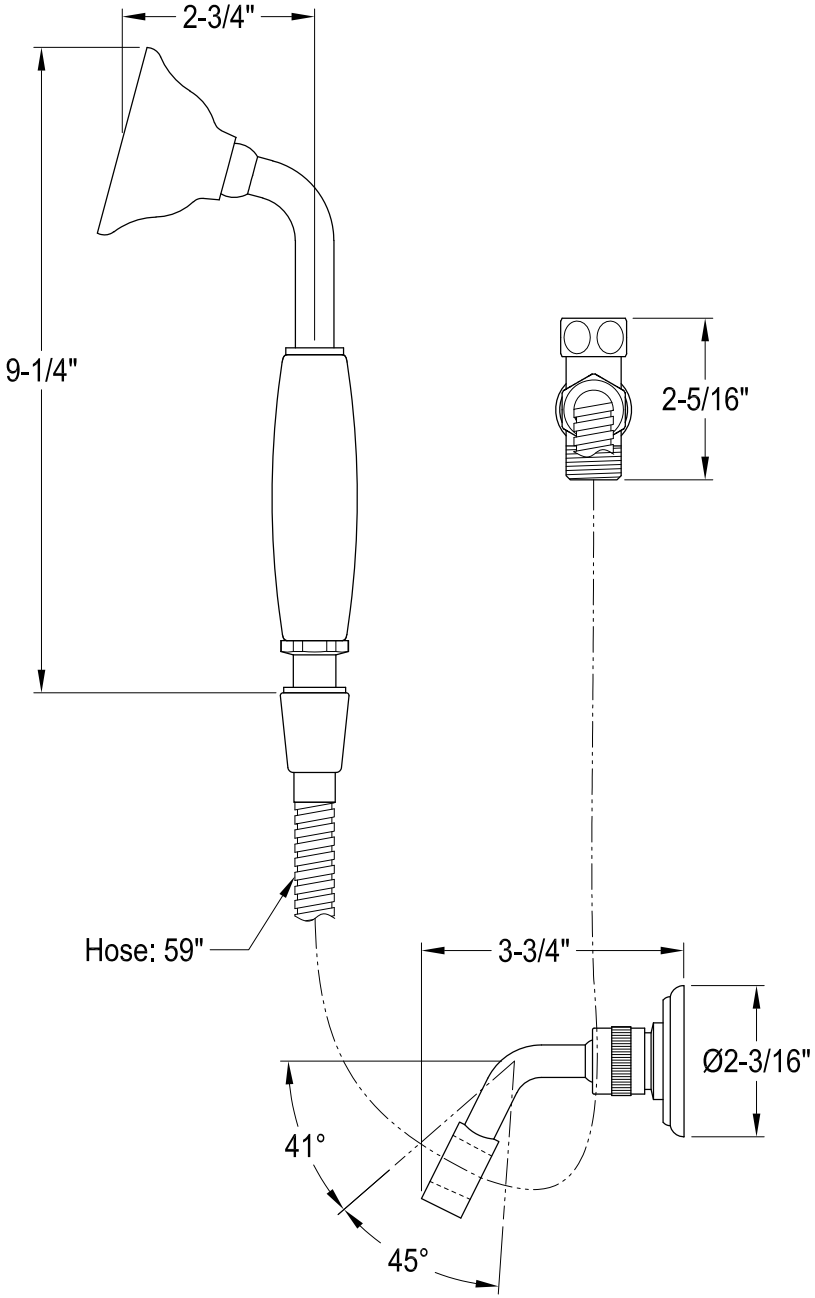

Ref# KX1050,1,2,3,6,8BD | 2023-12-A