KVTDE603122L0,1,7,8

60" Acrylic Alcove Tub with Left Hand Drain Hole

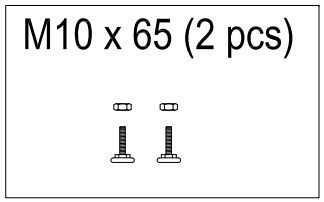

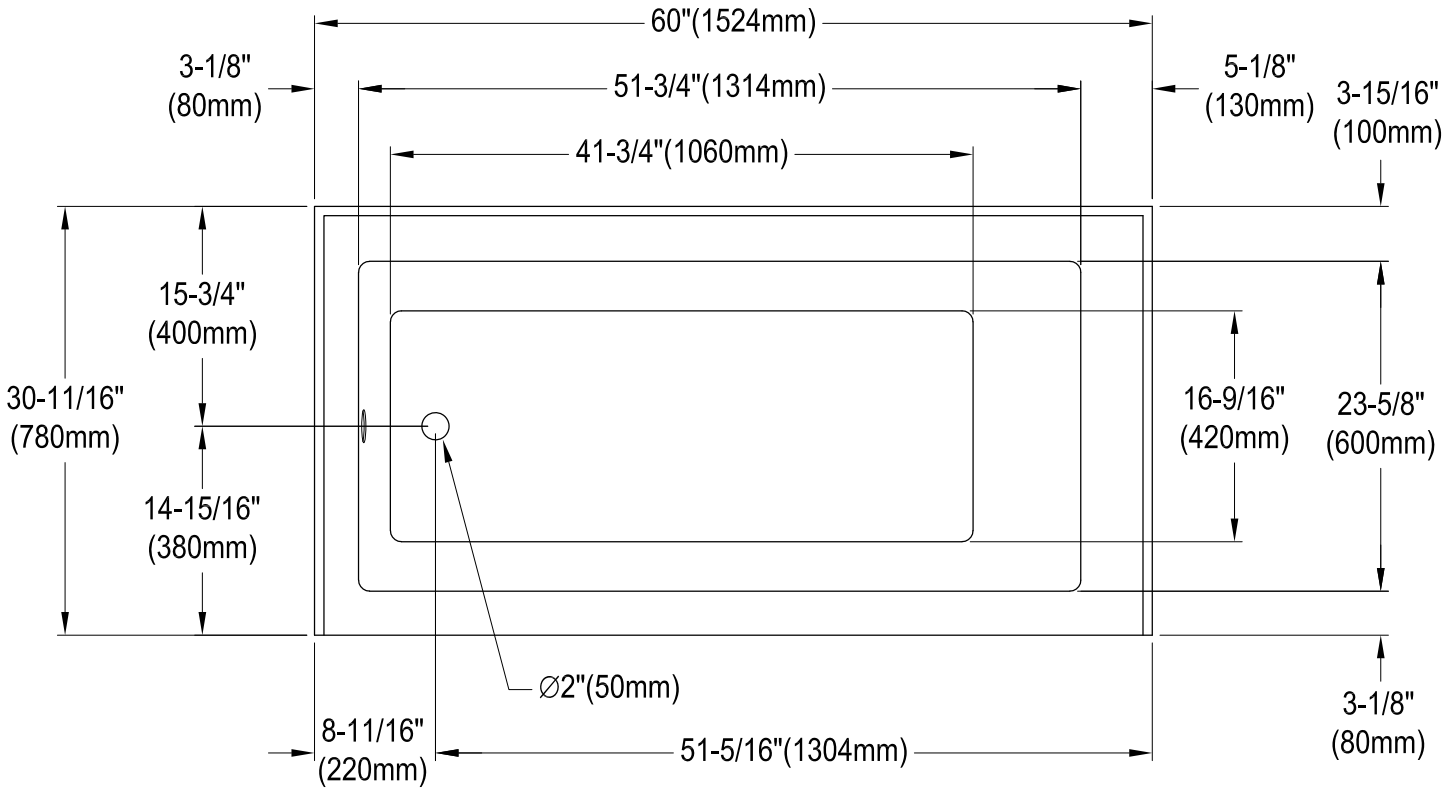

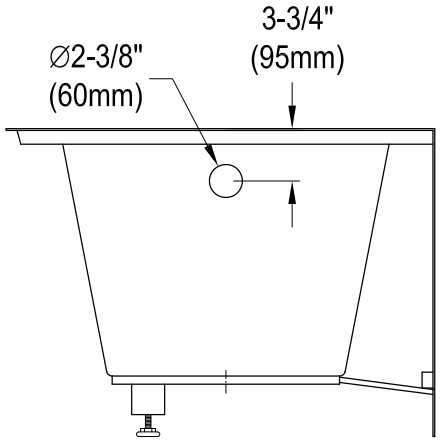

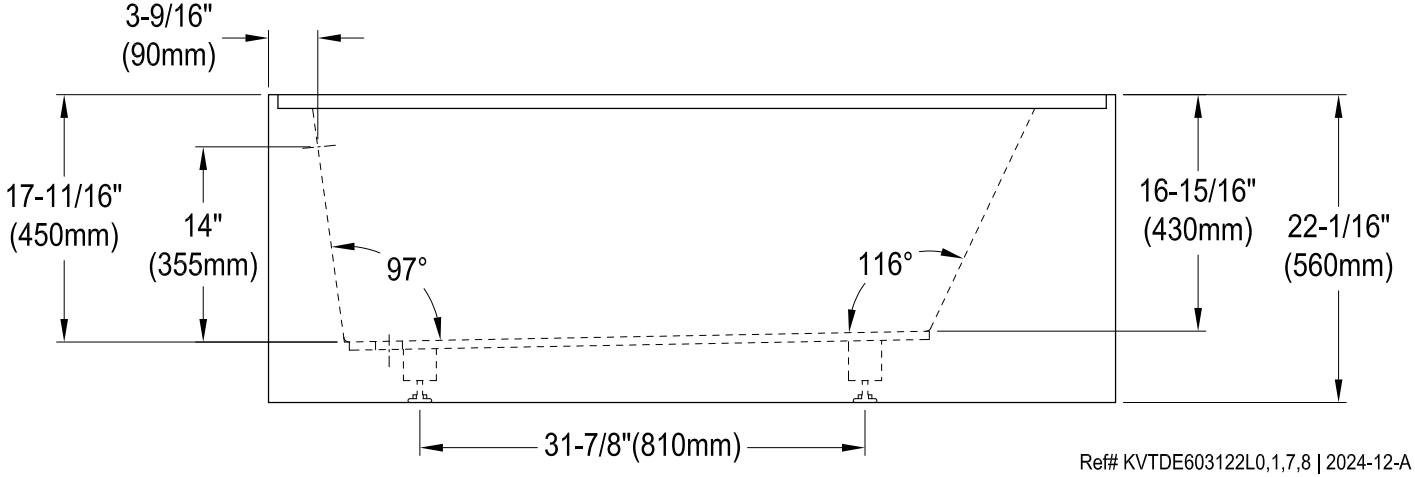

Ref# KVTDE603122L0,1,7,8 | 2024-12-A

KVTDE603122L0,1,7,8
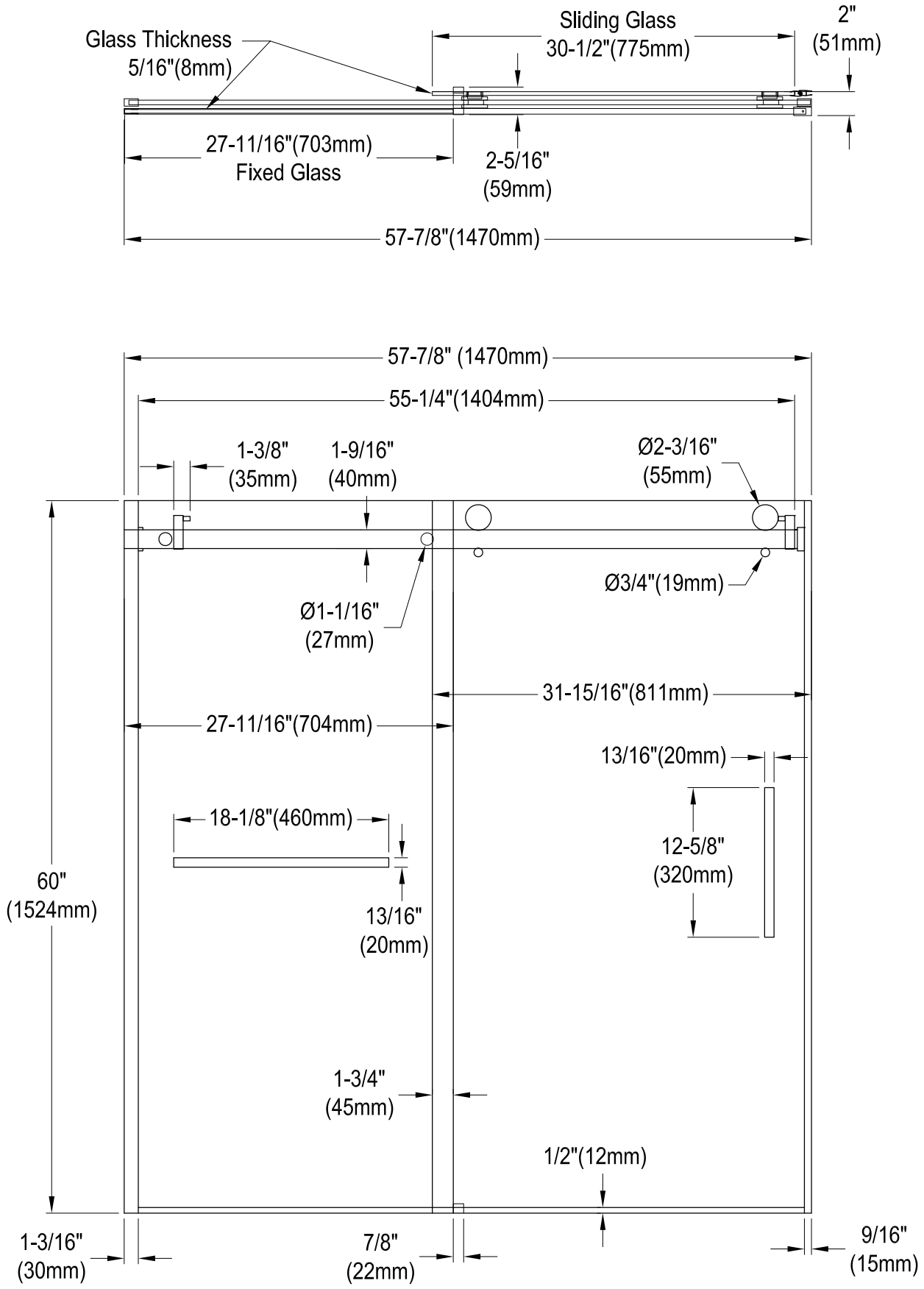
60" Sliding Shower Door with 5/16" Thick Tempered Glass, Right Sliding