KVTAM6031L21A0,1,7,8

60" Acrylic Anti-Skid Alcove Tub with Left Hand Drain Hole

M10 x 60 (2 pcs)
M10 x 45 (2 pcs)

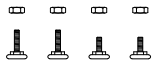

Drain Hole Size
(Scale 3:1)

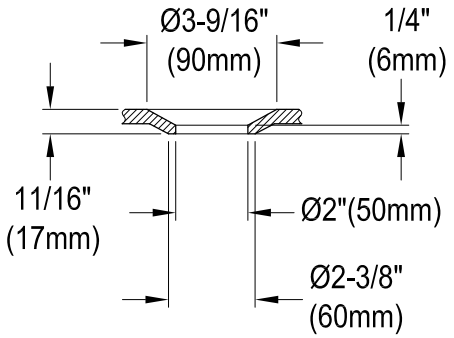

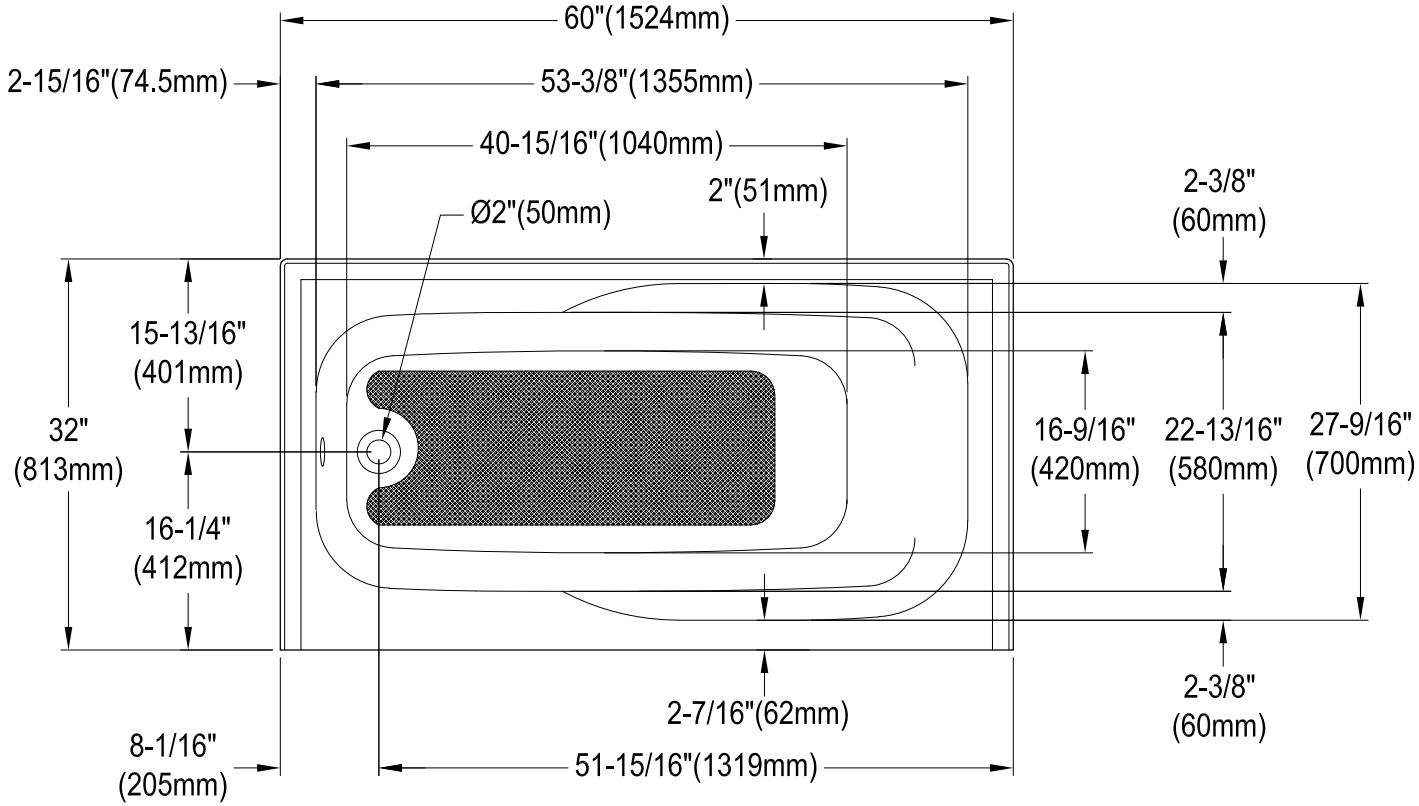

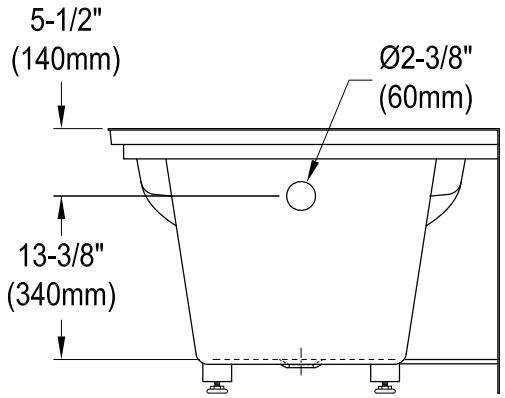

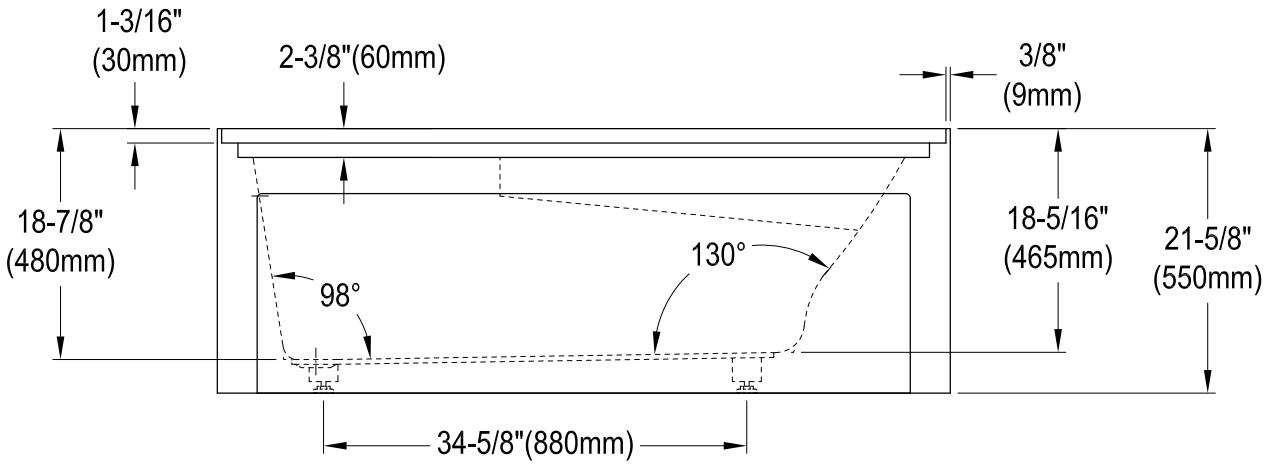

KVTAM6031L21A0,1,7,8
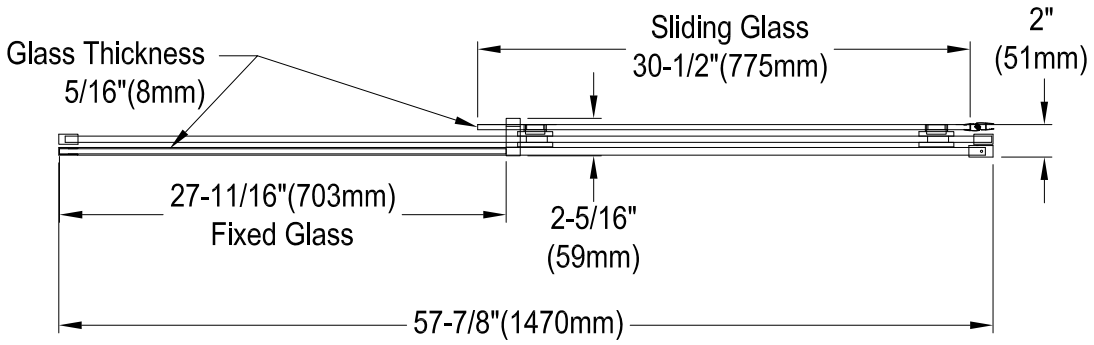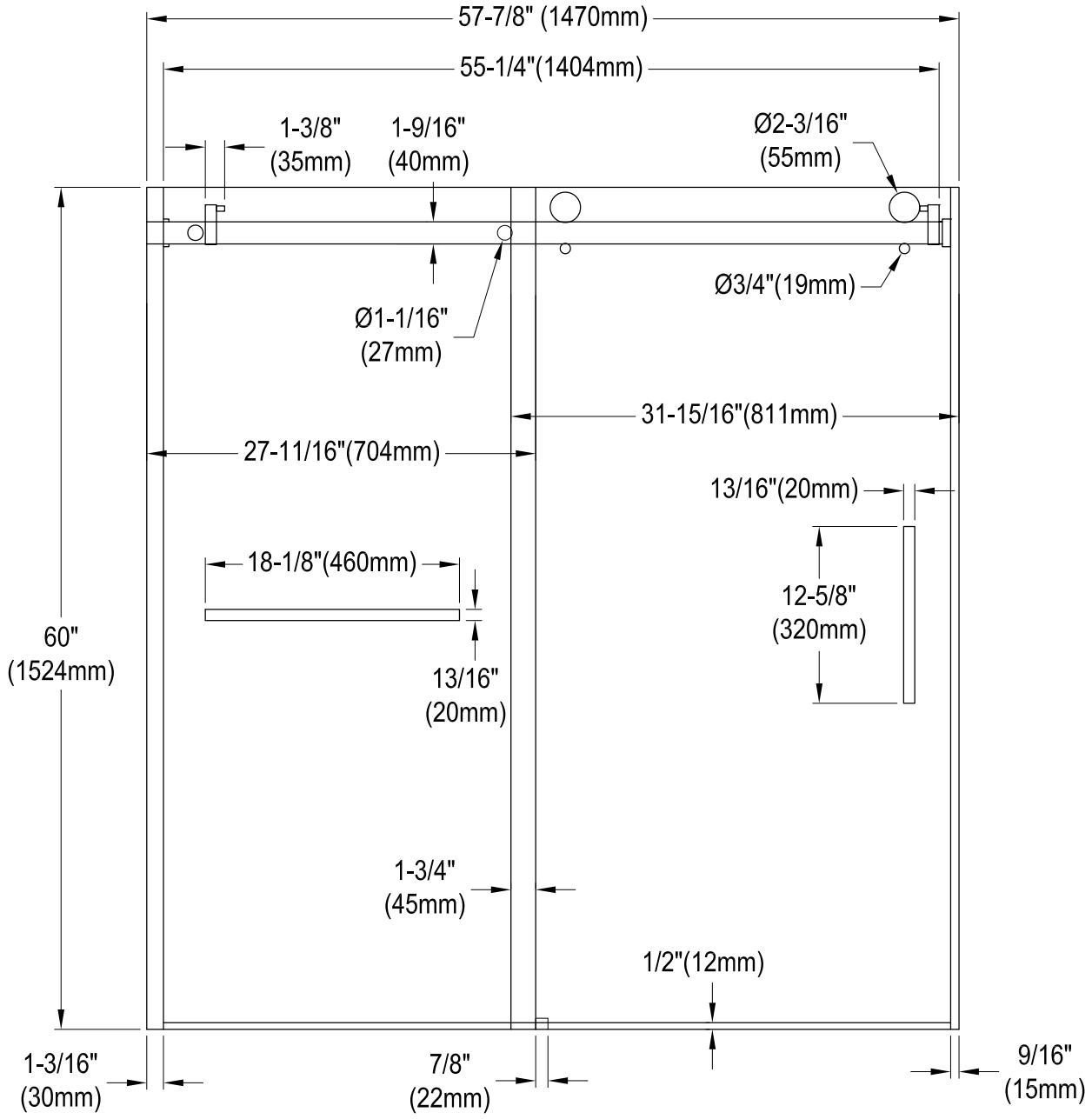
60" Sliding Shower Door with 5/16" Thick Tempered Glass, Right Sliding