KINGSTON

TO ORDER PARTS, CALL: 1-877-252-7277
www.kingstonbrass.com

KVPB3122W38CRV0,1,6,7,8
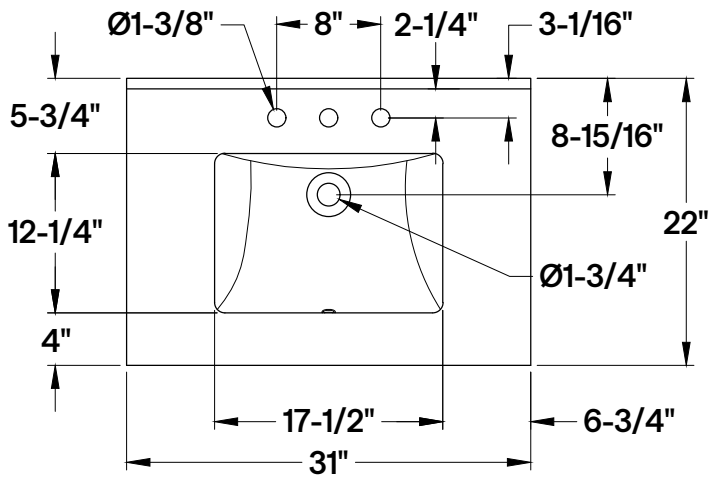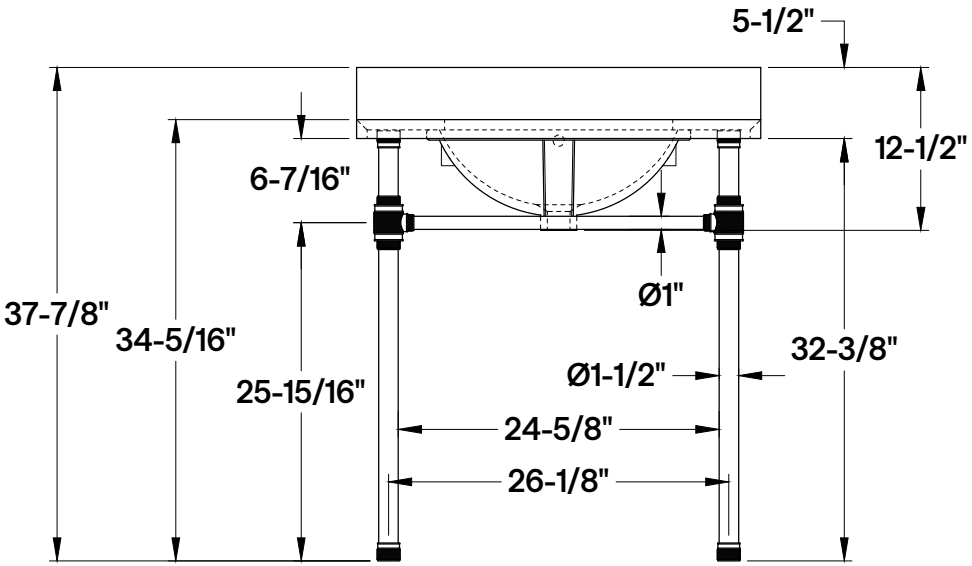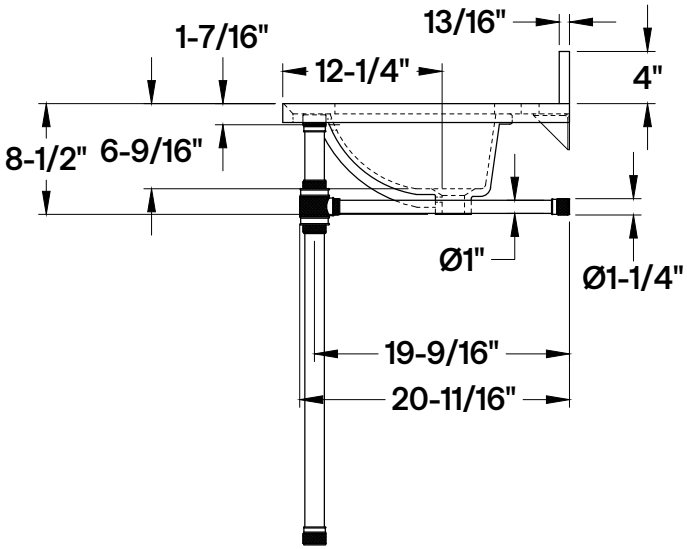
31" Console Sink with Brass Legs