KVPB31227W8MB,CP,PN,BB
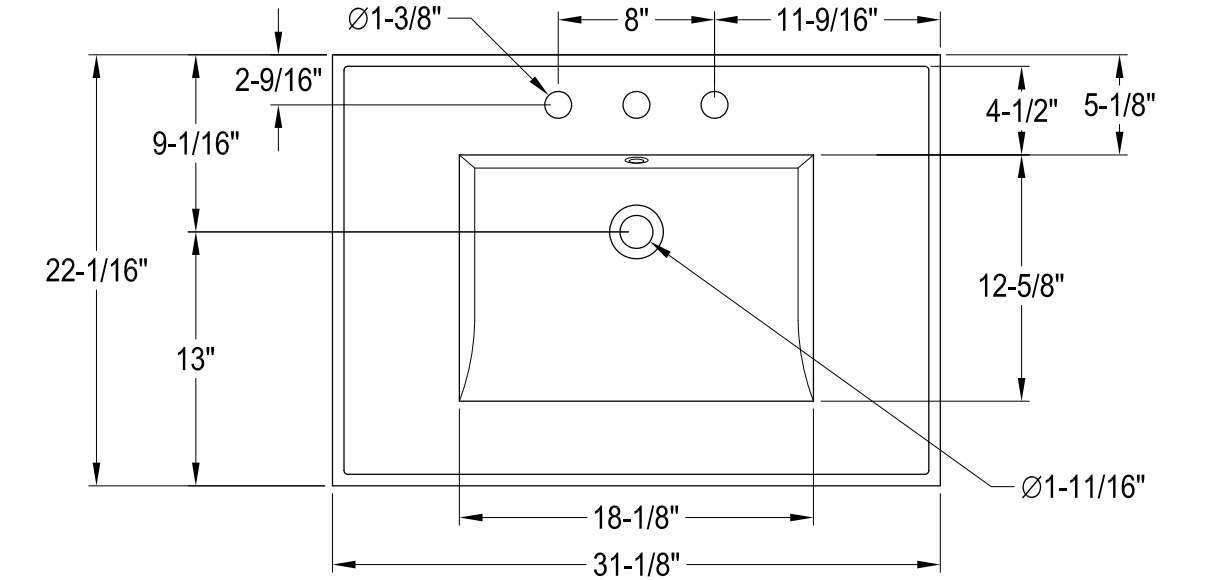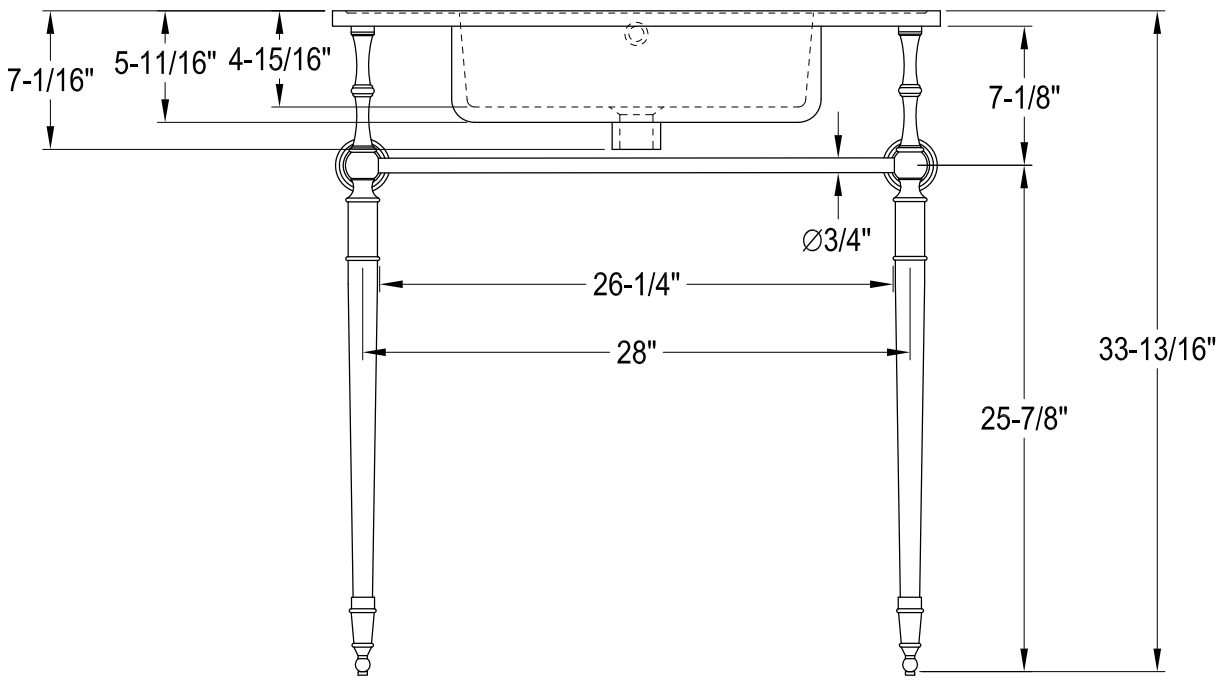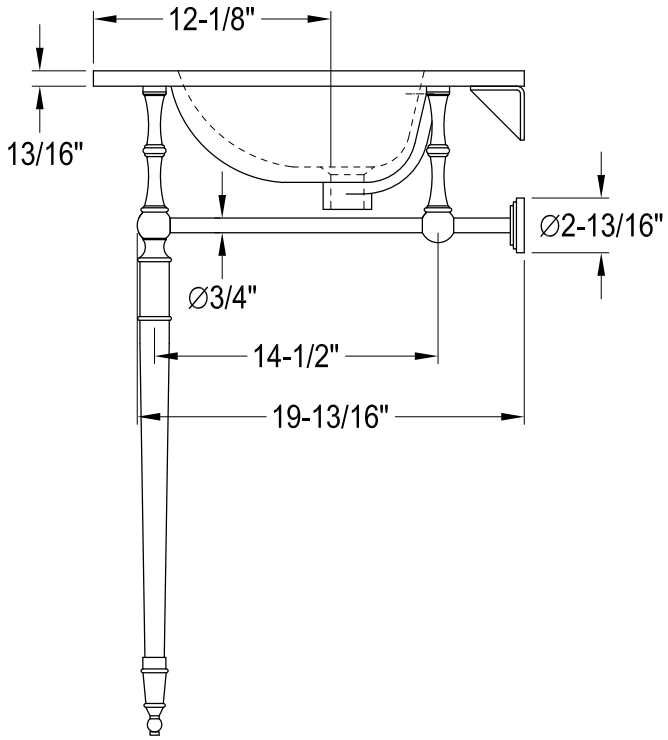
31" Console Sink With Brass Legs