KVPB31227W40,1,6,7

31" Console Sink With Stainless Steel Legs

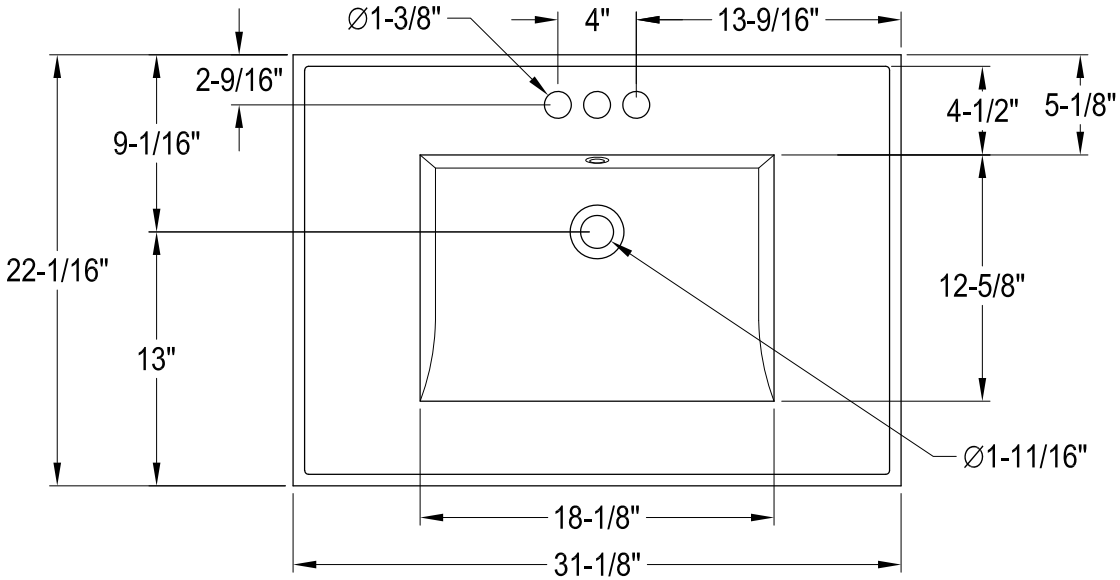

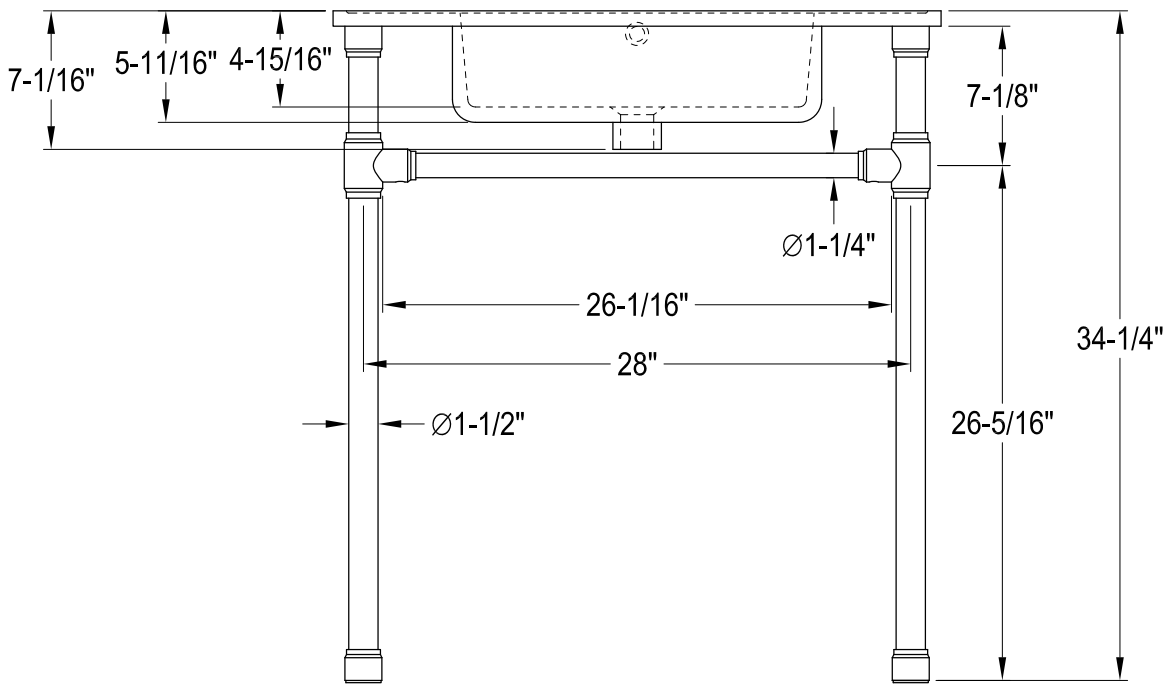

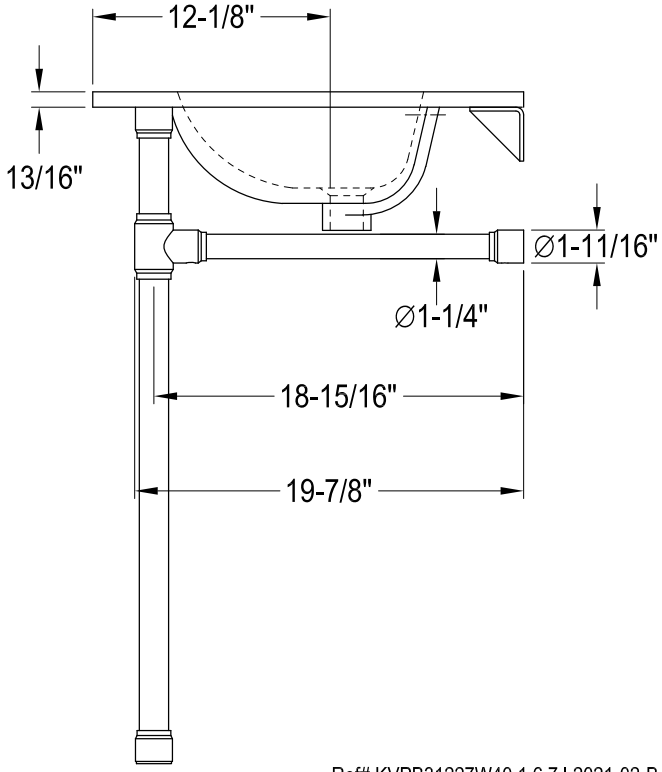

Ref# KVPB31227W40,1,6,7 | 2021-02-B