KINGSTON

TO ORDER PARTS, CALL: 1-877-252-7277
www.kingstonbrass.com

KVPB2522L38

25" x 22" Solid Surface White Stone Texture Calacatta Vanity Top with Oval Sink

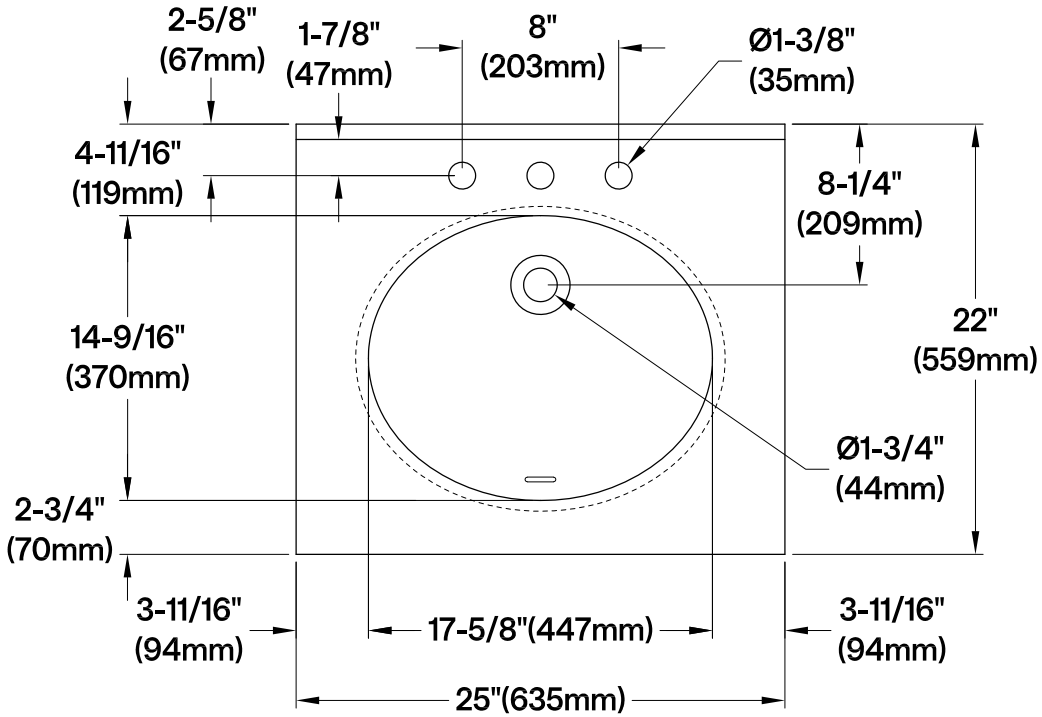

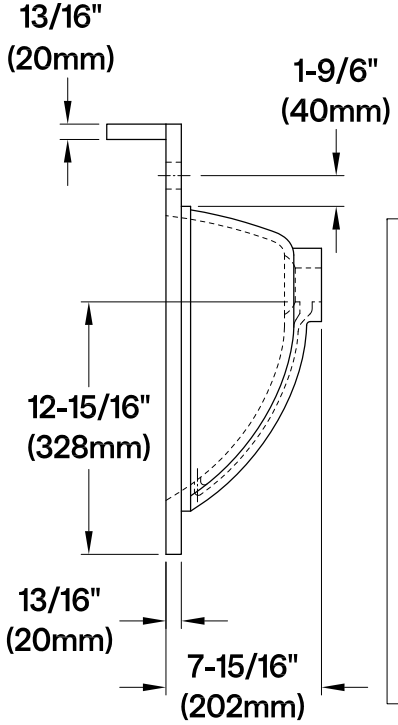

Drain Hole Size
(Scale 2:1)

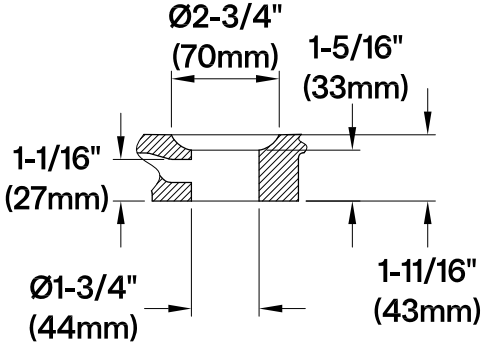

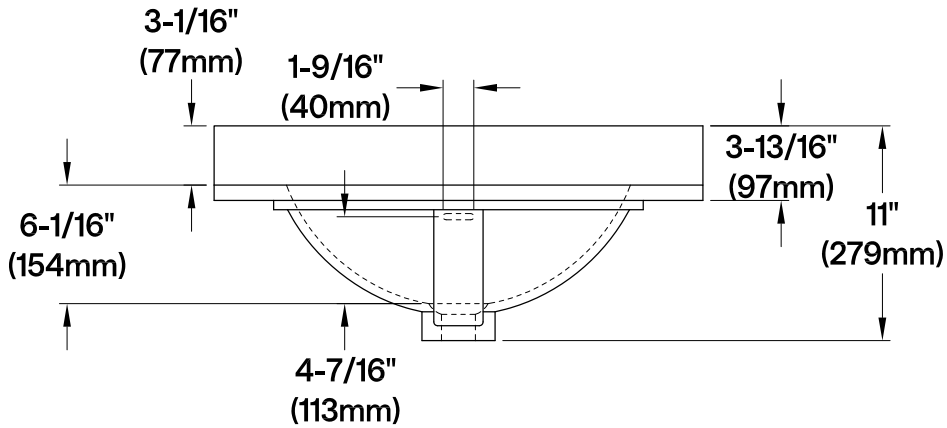

VSPLBRKT (1 pc)

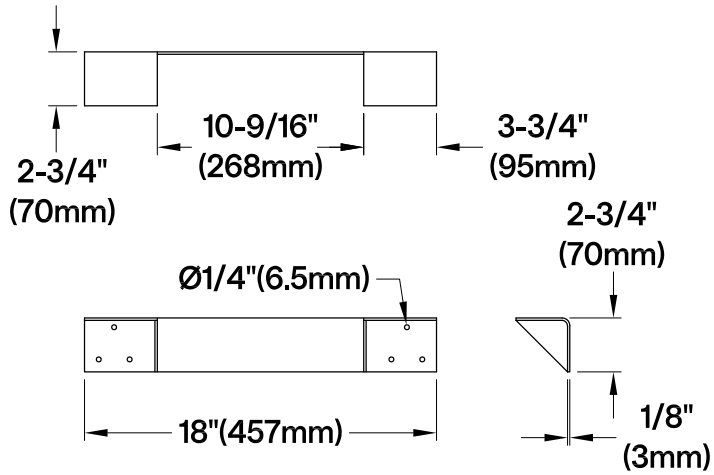

2025-11-A