KTTX0,1,2,3,6,7,8

Tank Lever

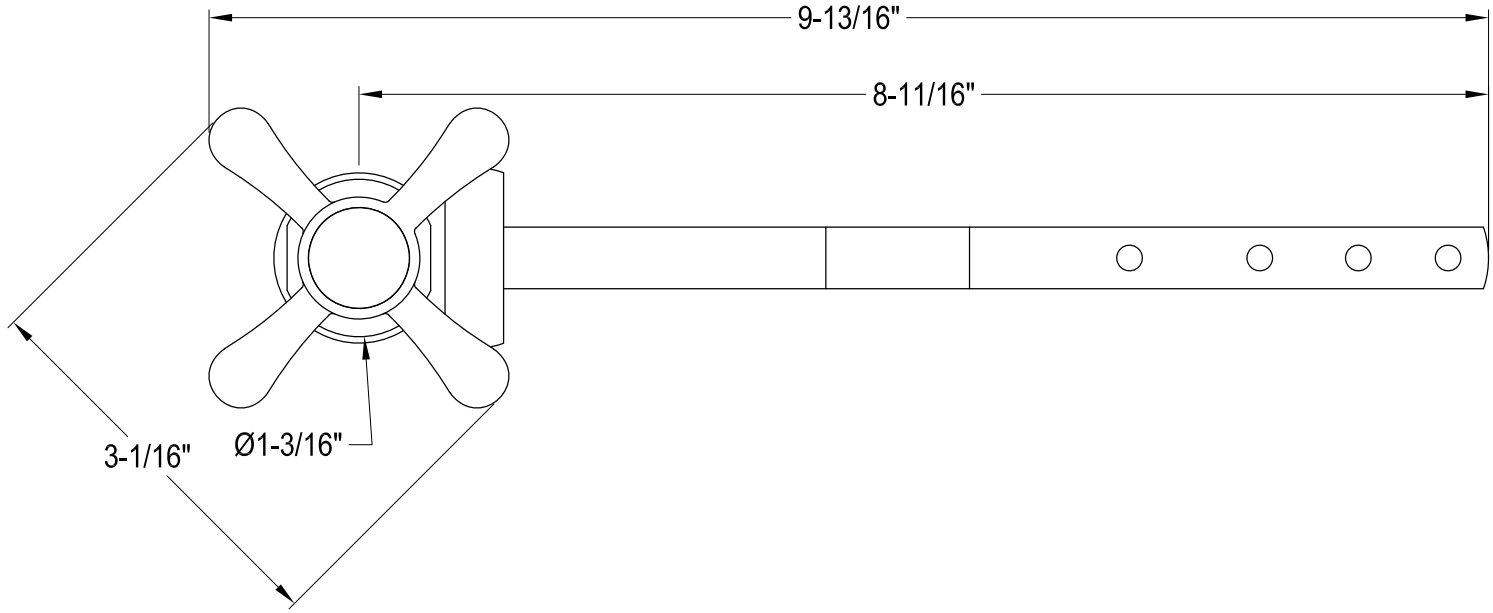

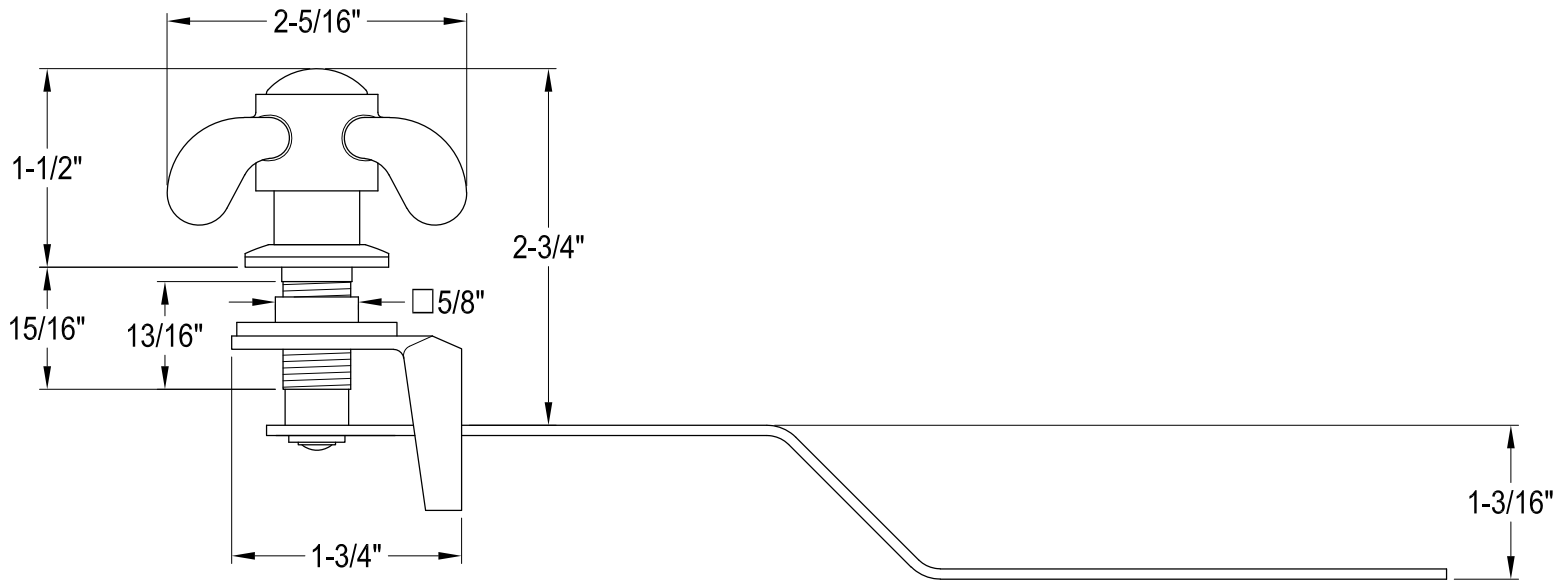

Ref# KTTX0,1,2,3,6,7,8 | 2024-11-A