KSRPT410DC
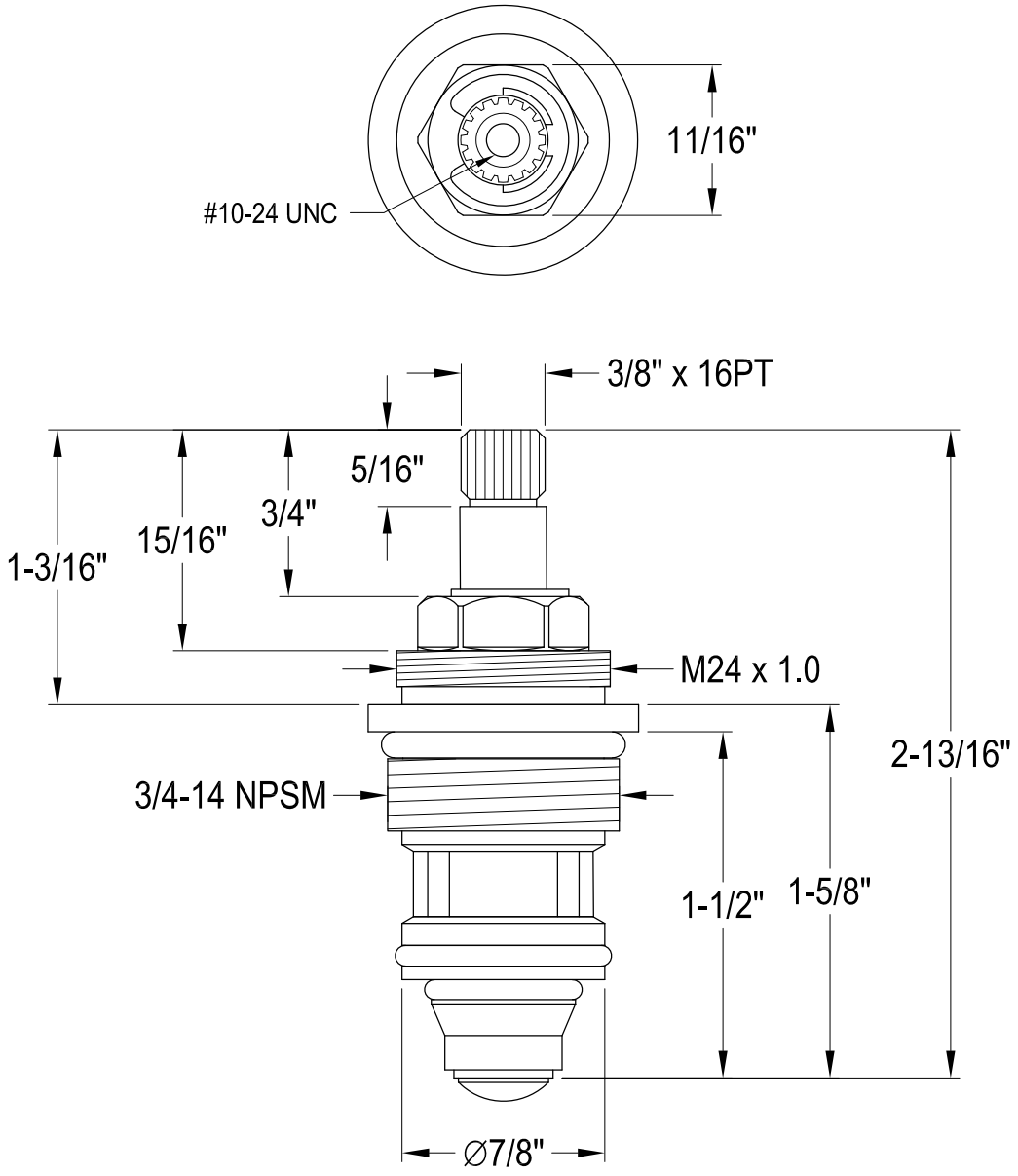
Cartridge