KSRPT1000DC
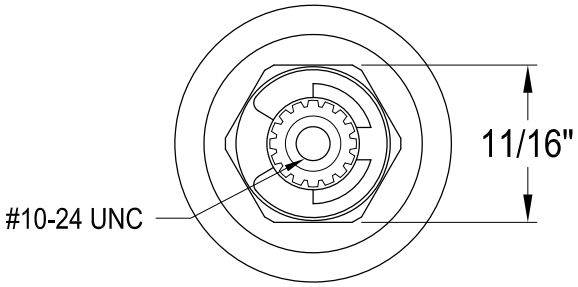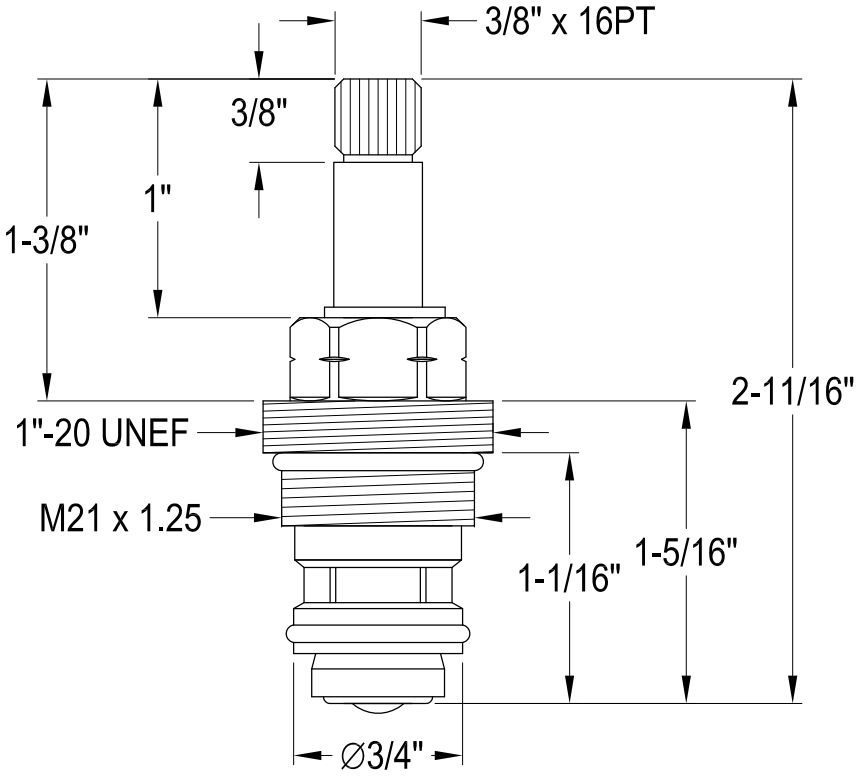
Cartridge