KSRPL8000C
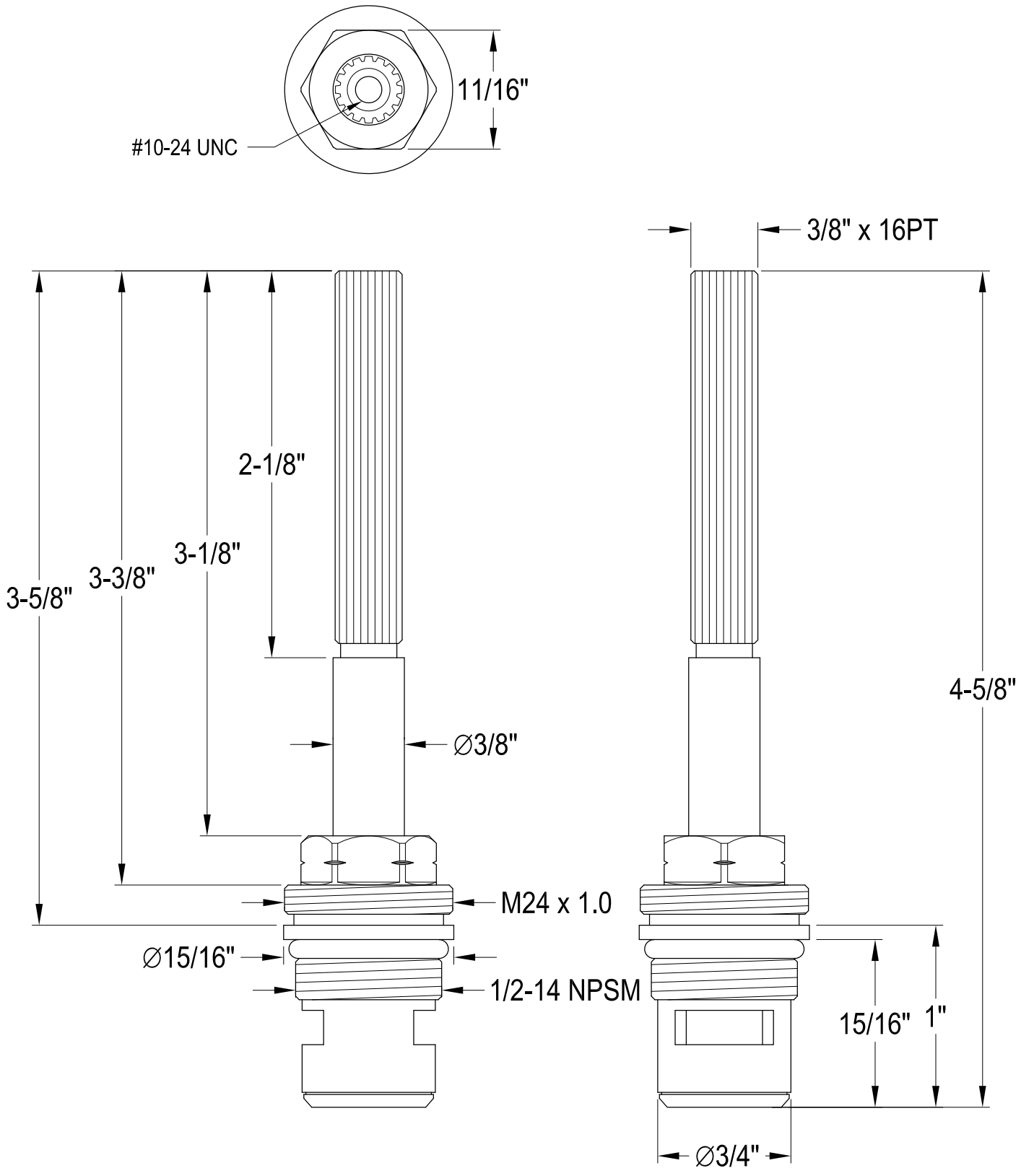
Cartridge,Cold