KSH1811,5,8PL
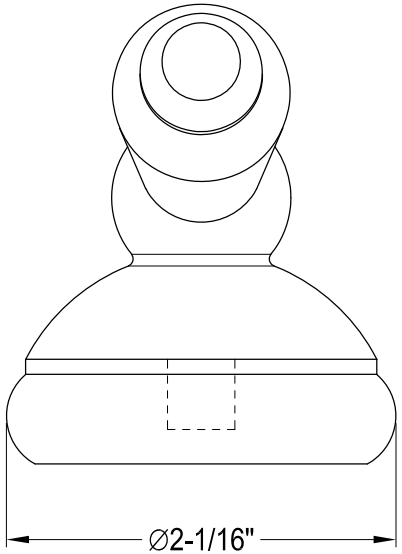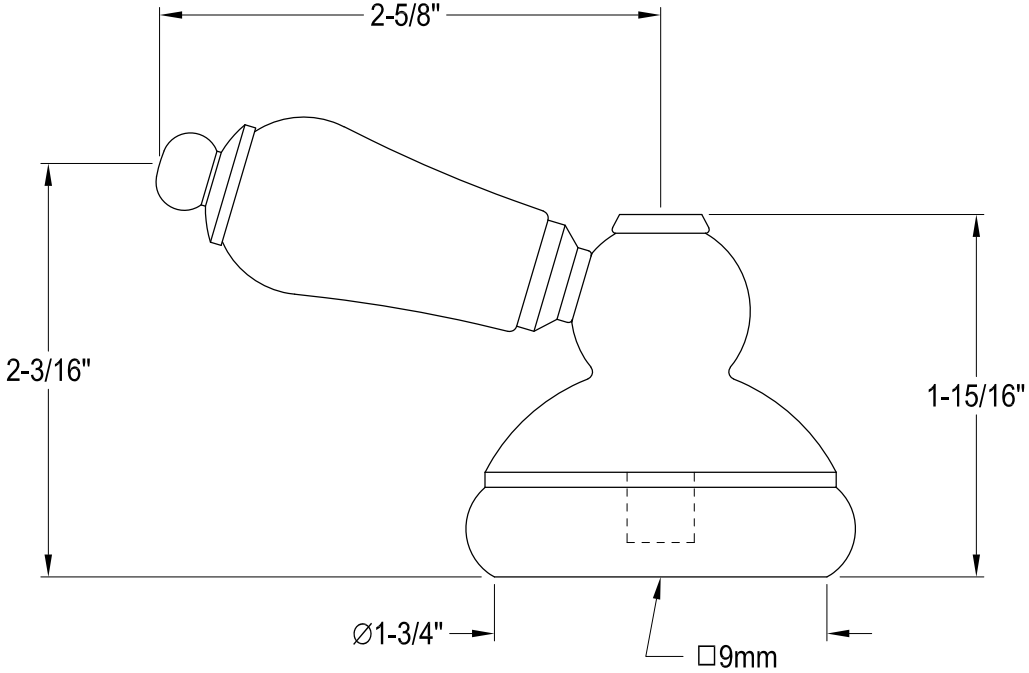
Single Handle