KSD3540,1,2,3,5,6,7,8CG,CGVN
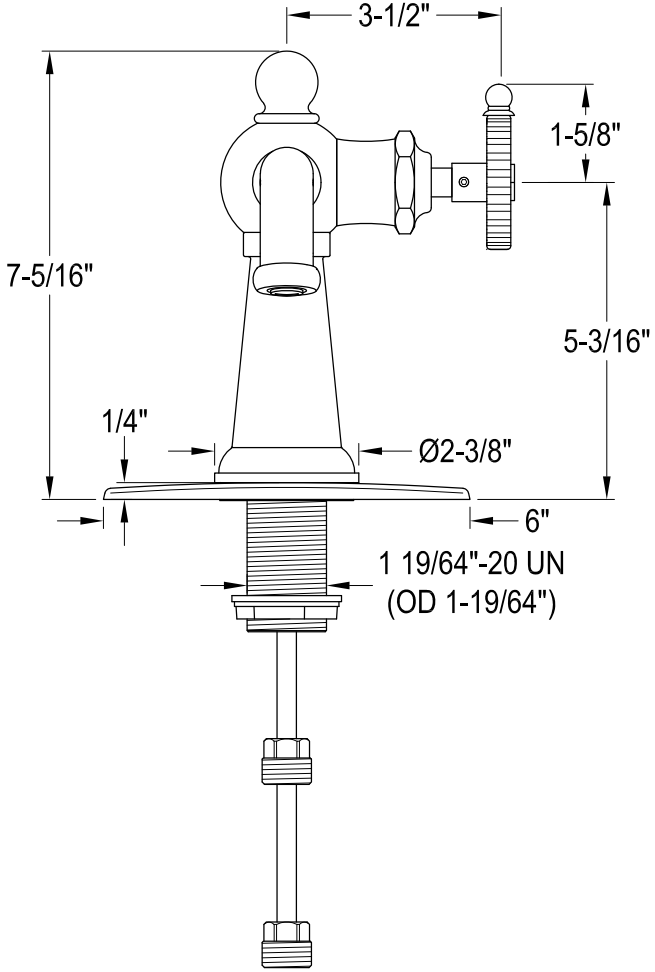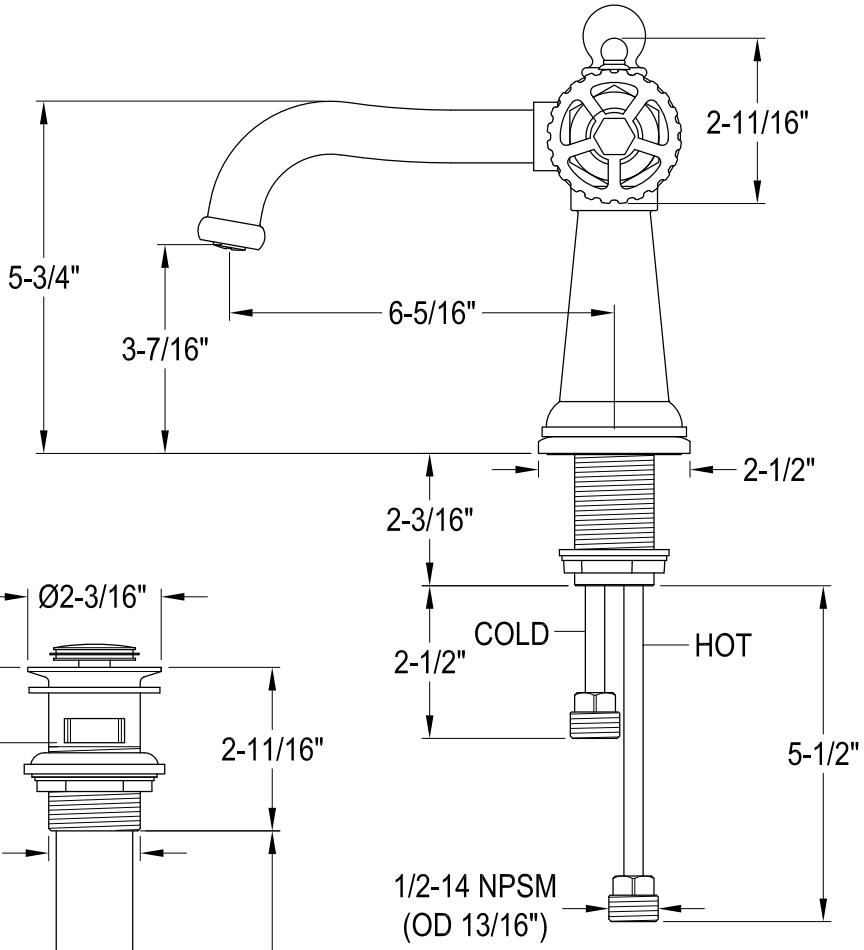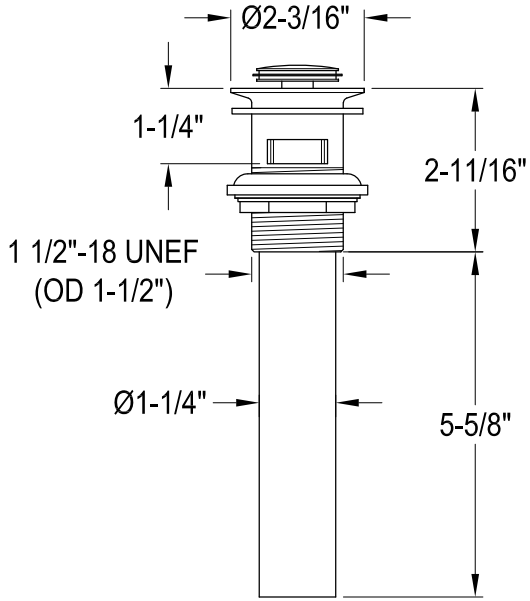
Single Handle Lavatory Faucet with Push-up Pop-Up