KS8260,1,2,5,6,7,8CKLBS
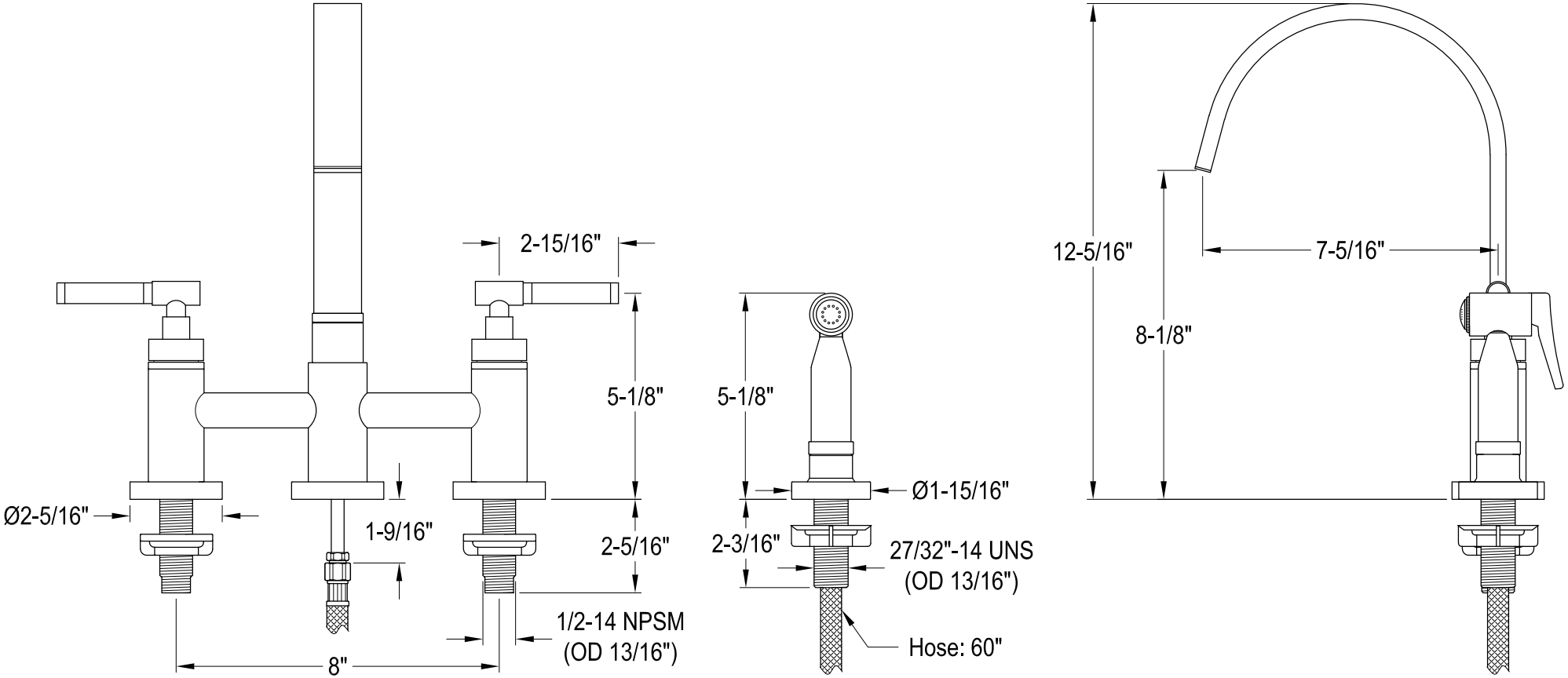
Twin Handles Bridge Kitchen Faucet with Brass Sprayer