KS6040,1,7,8CML
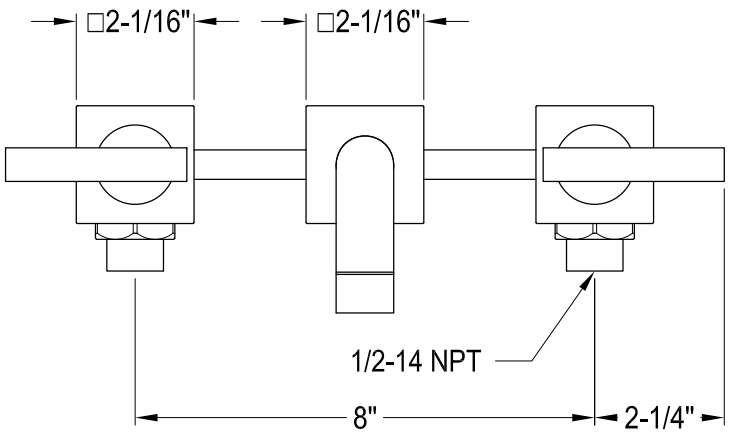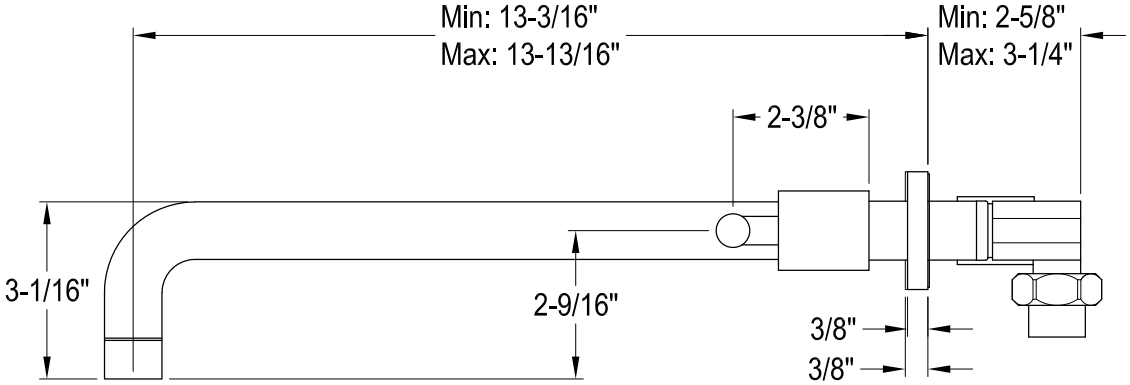
Twin Handle Wall Mount Tub Filler