KS6020,1,2,3,5,6,7,8RX
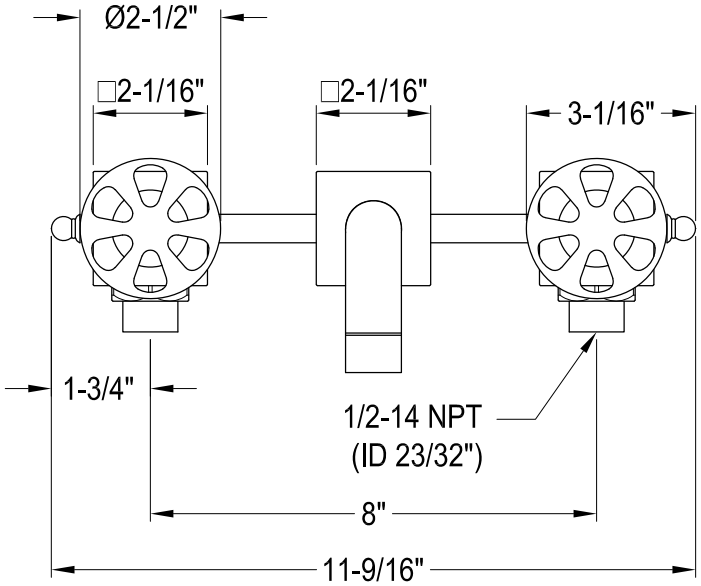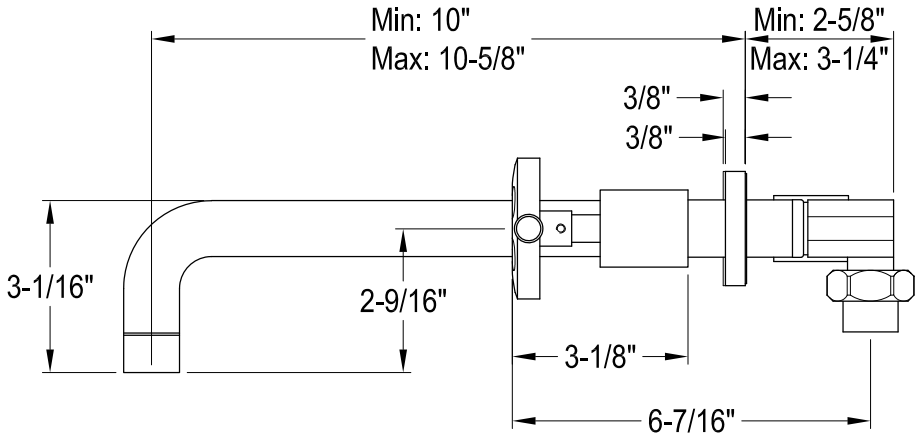
Twin Handles Wall Mount Tub Filler