# KS4040,1,2,3,5,6,7,8BPL
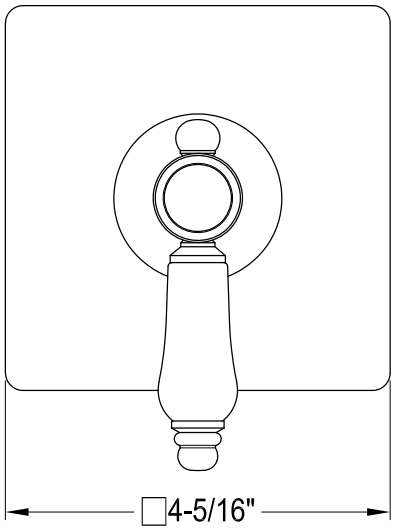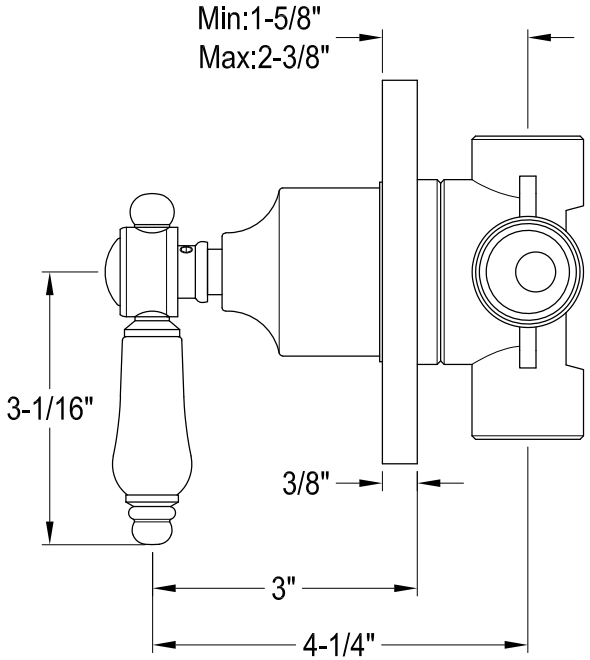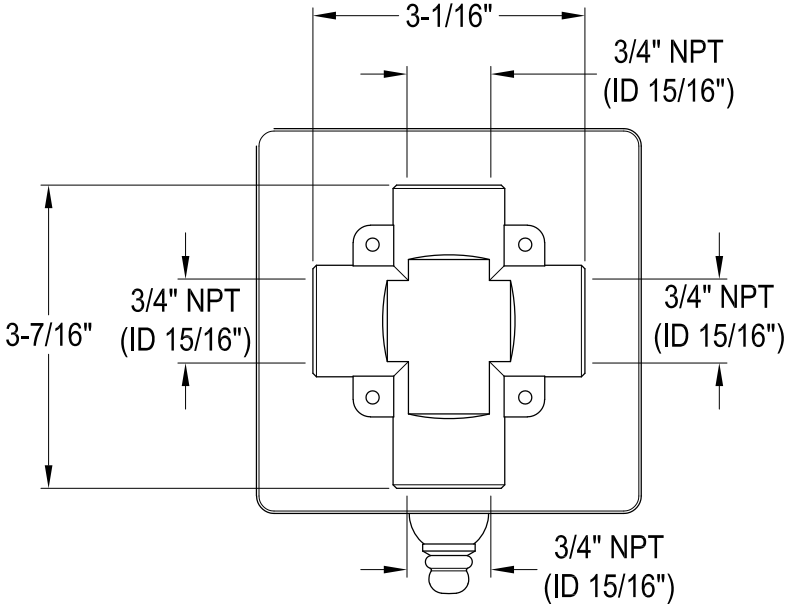
Six-Way Diverter Valve with Single Handle & Square Plate