KS3270,1,2,3,5,6,7,8PXBS
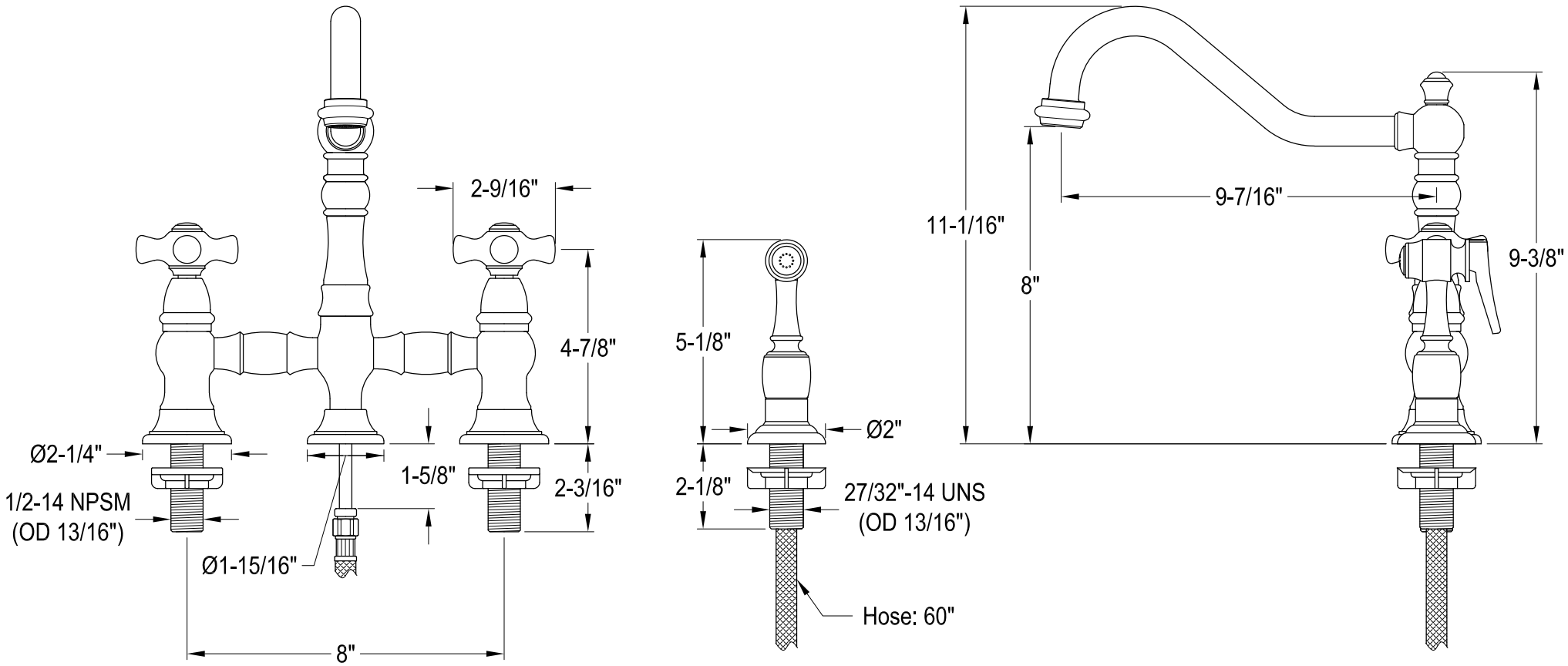
Twin Handles 8" Bridge Kitchen Faucet with Brass Sprayer