KS3270,3,6,7PKXBS
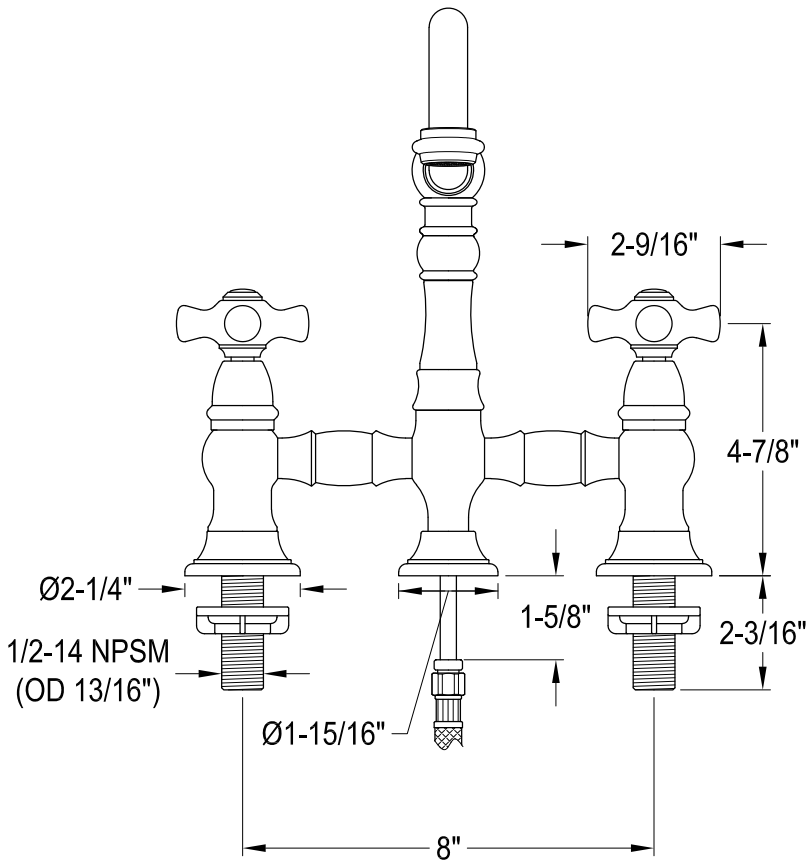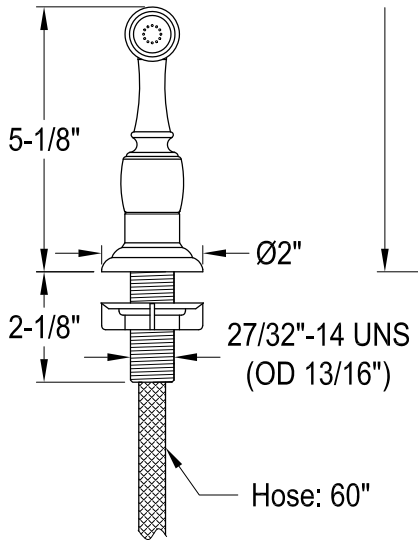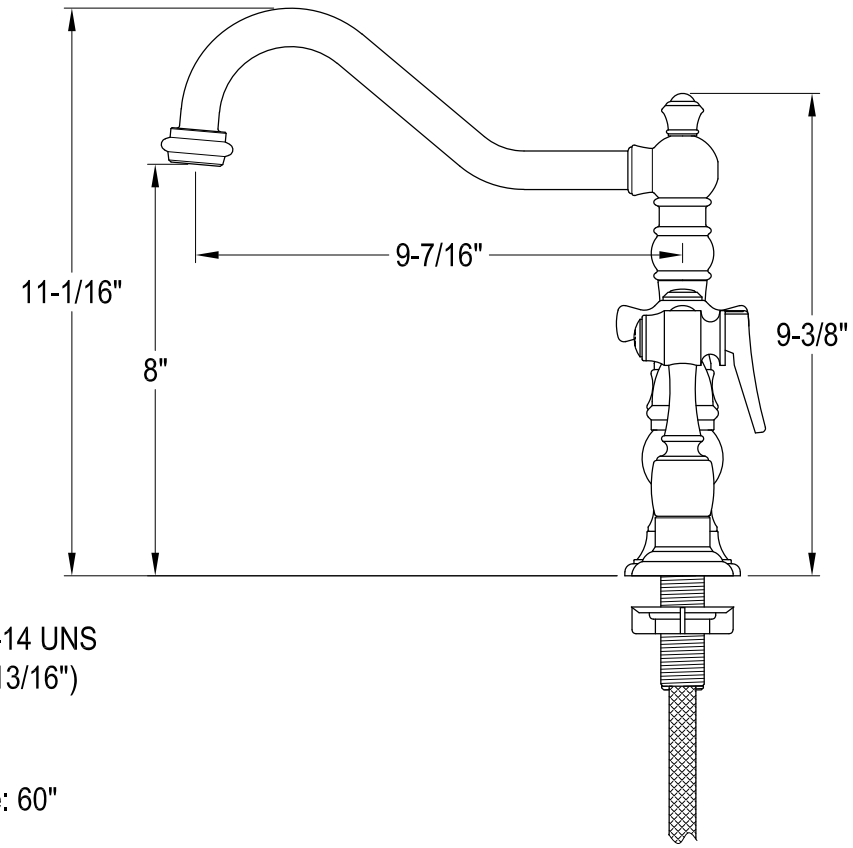
Twin Handles 8" Bridge Kitchen Faucet with Brass Sprayer