# KS2981,2,5,8KX
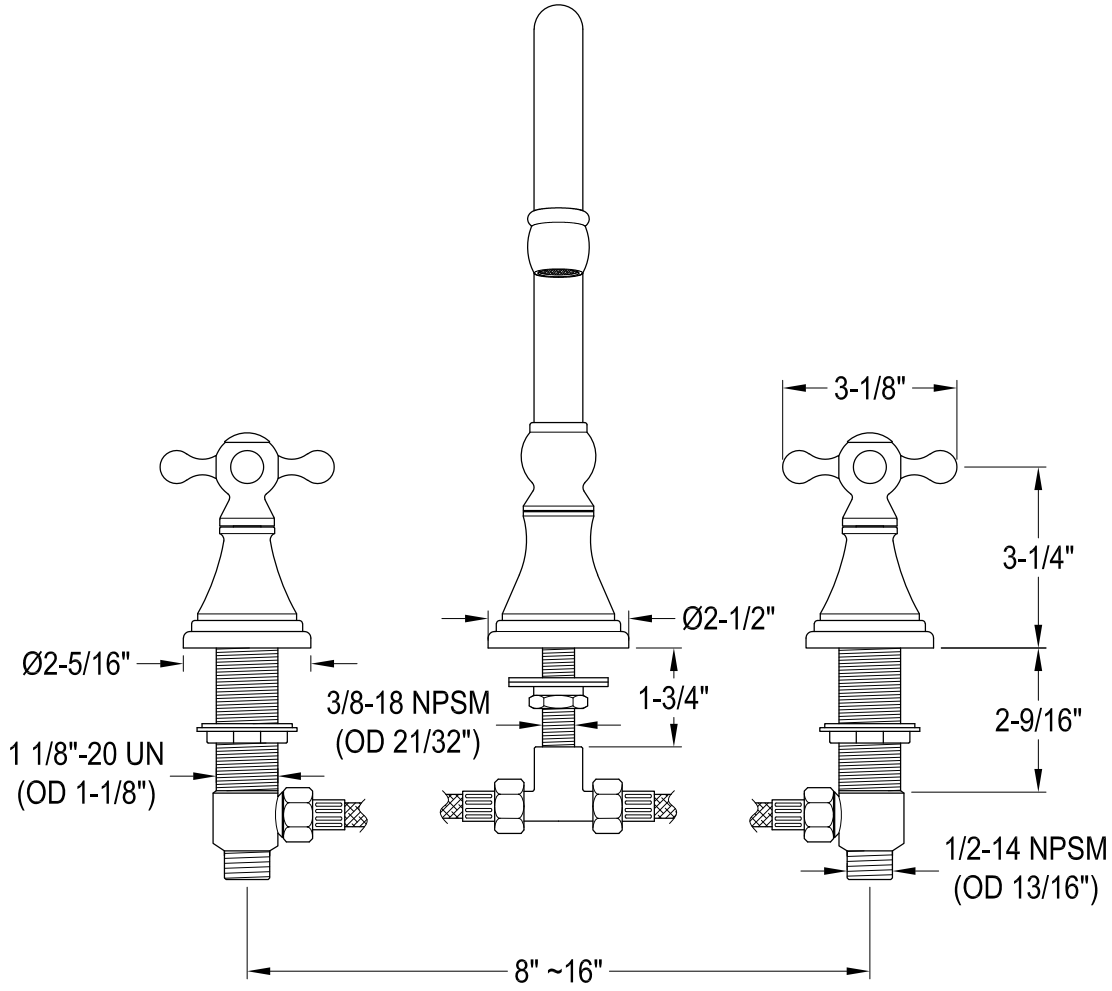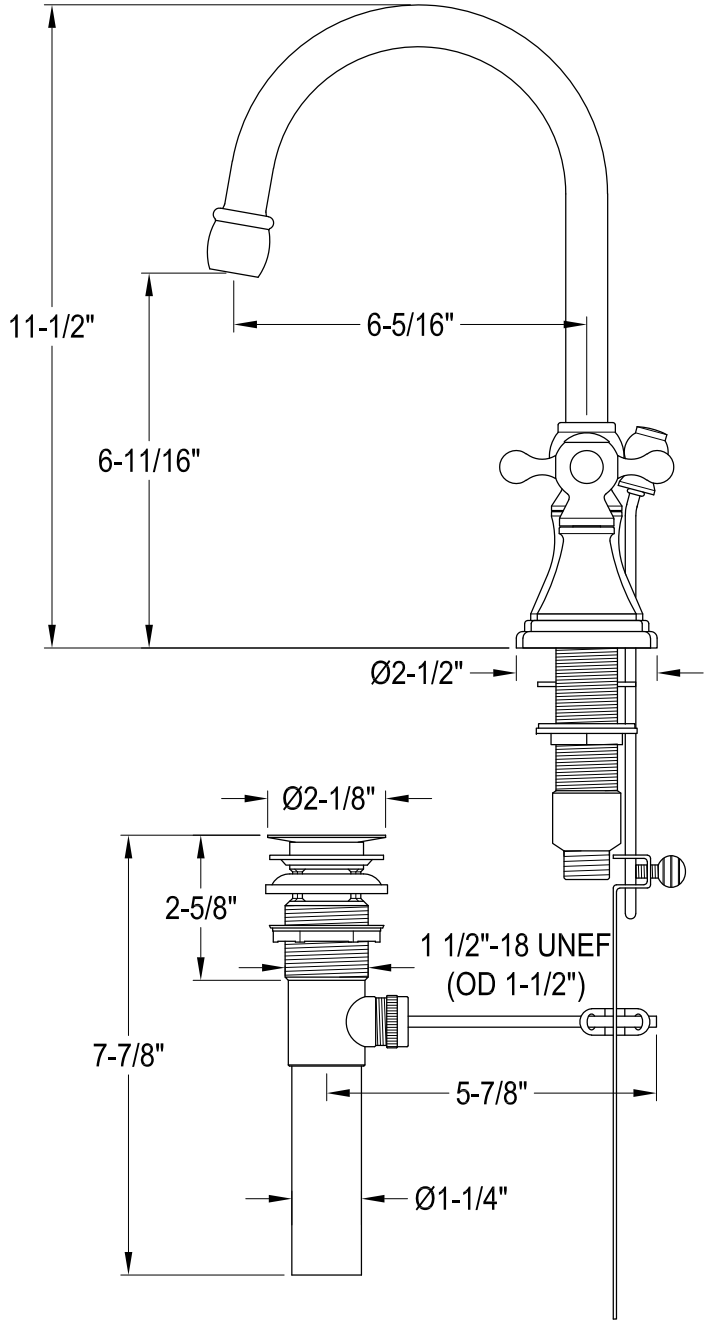
Widespread Lavatory Faucet with Brass Pop-Up