# KB911,2,4,5,8BL
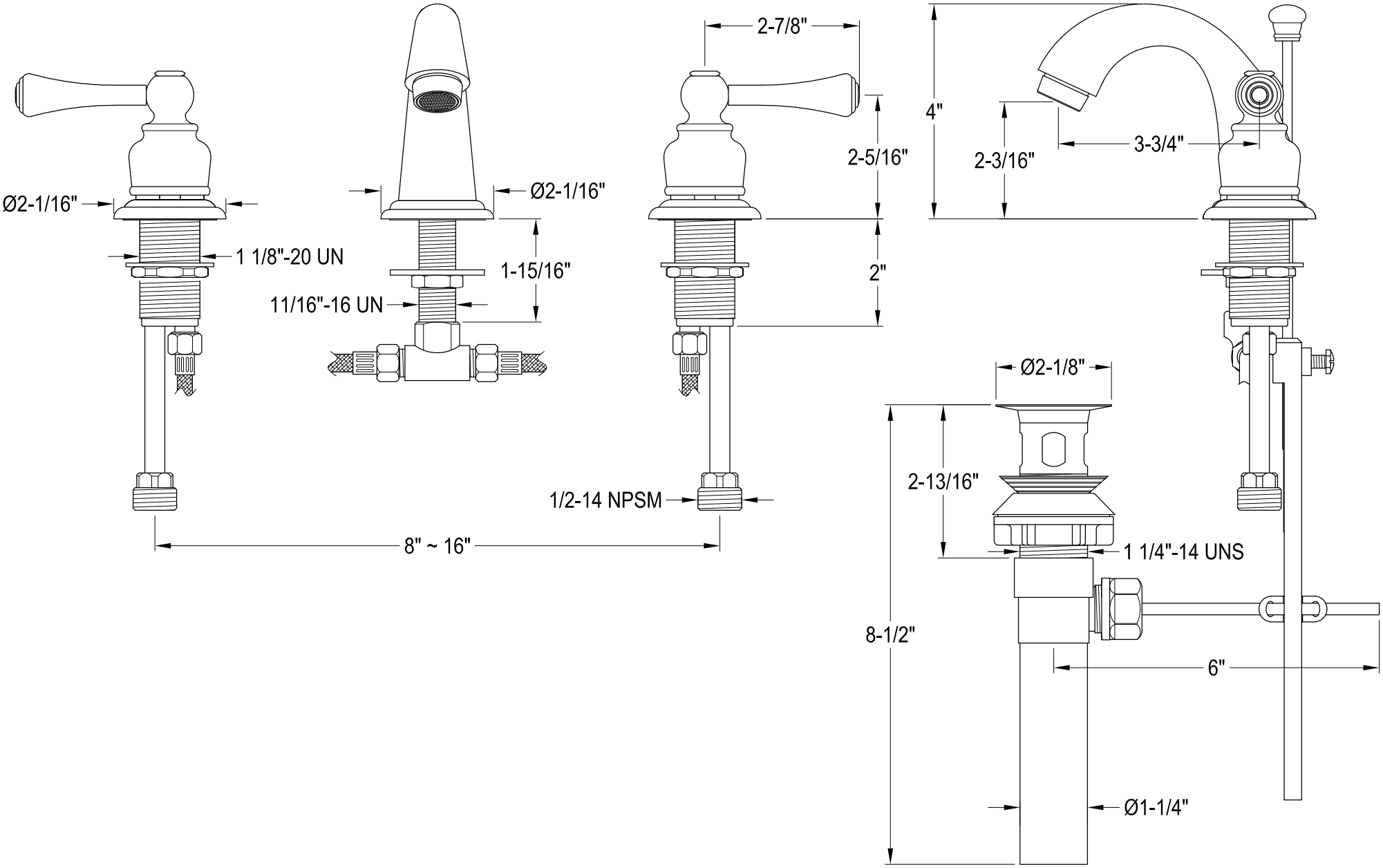
Widespread Lavatory Faucet with Retail Pop-Up