KB6330,1,2,3,6,7,8BX
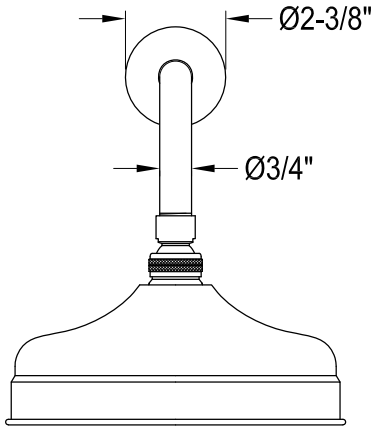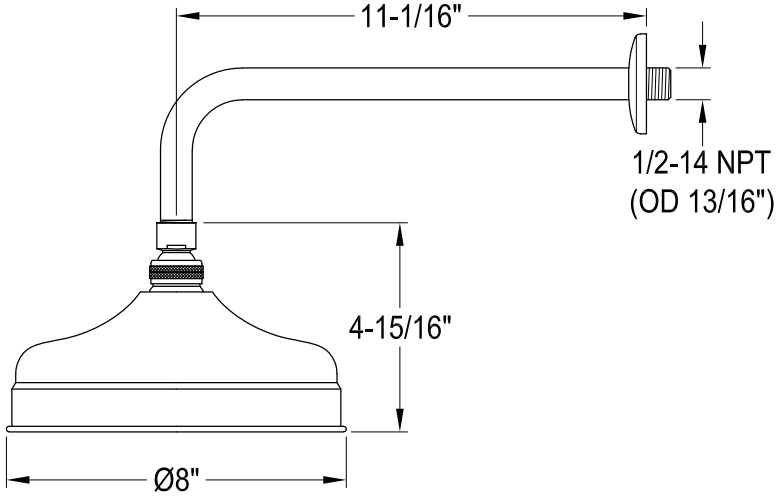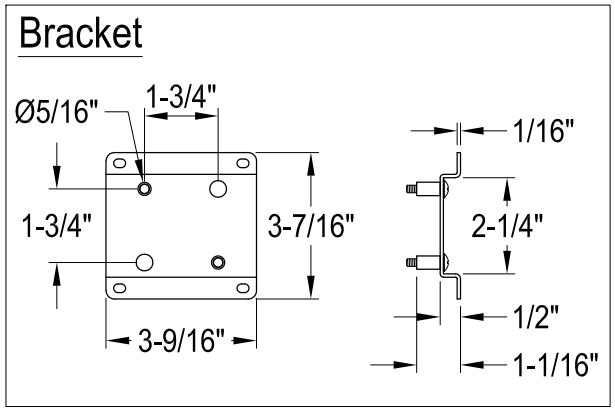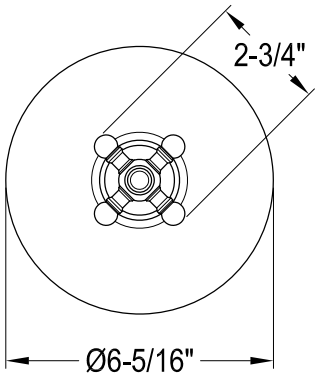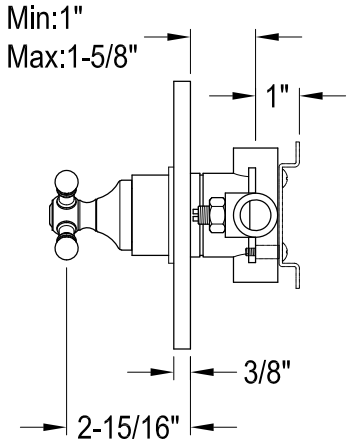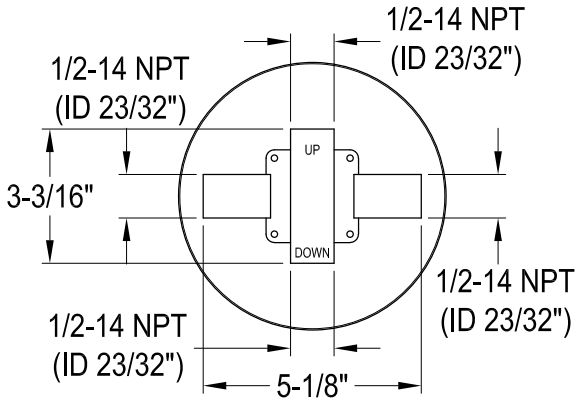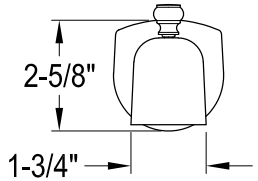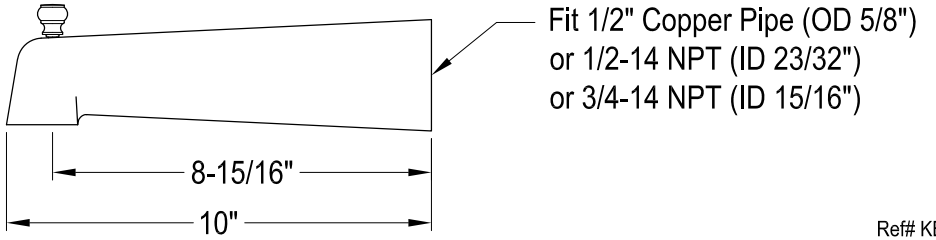
Single Handle Pressure Balanced Tub & Shower Faucet