DESIGNER HARDWARE

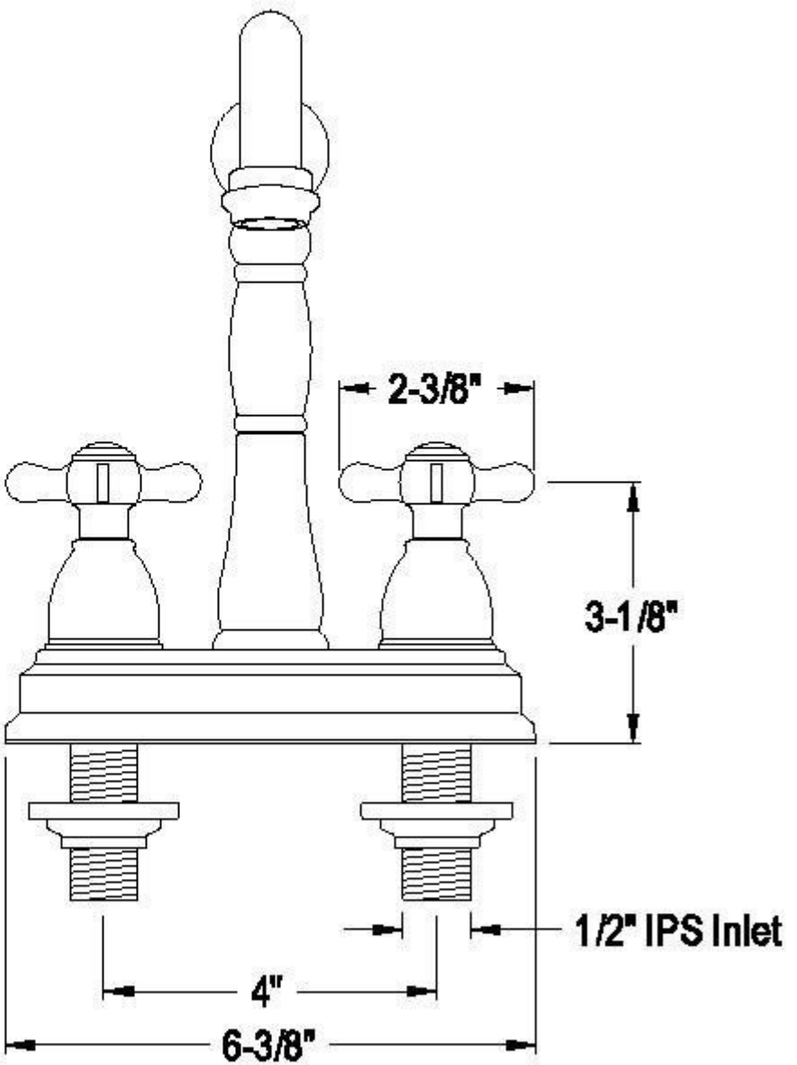

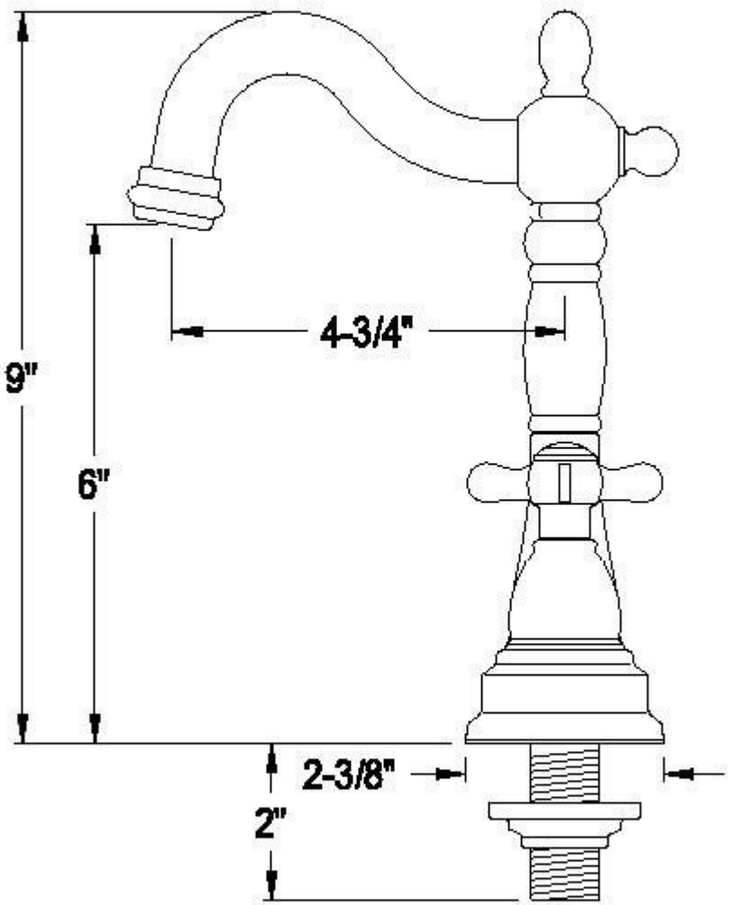

Copyright © 2019 DesignerHardware.com. All rights reserved.