CC44150,1,2,5,8DL
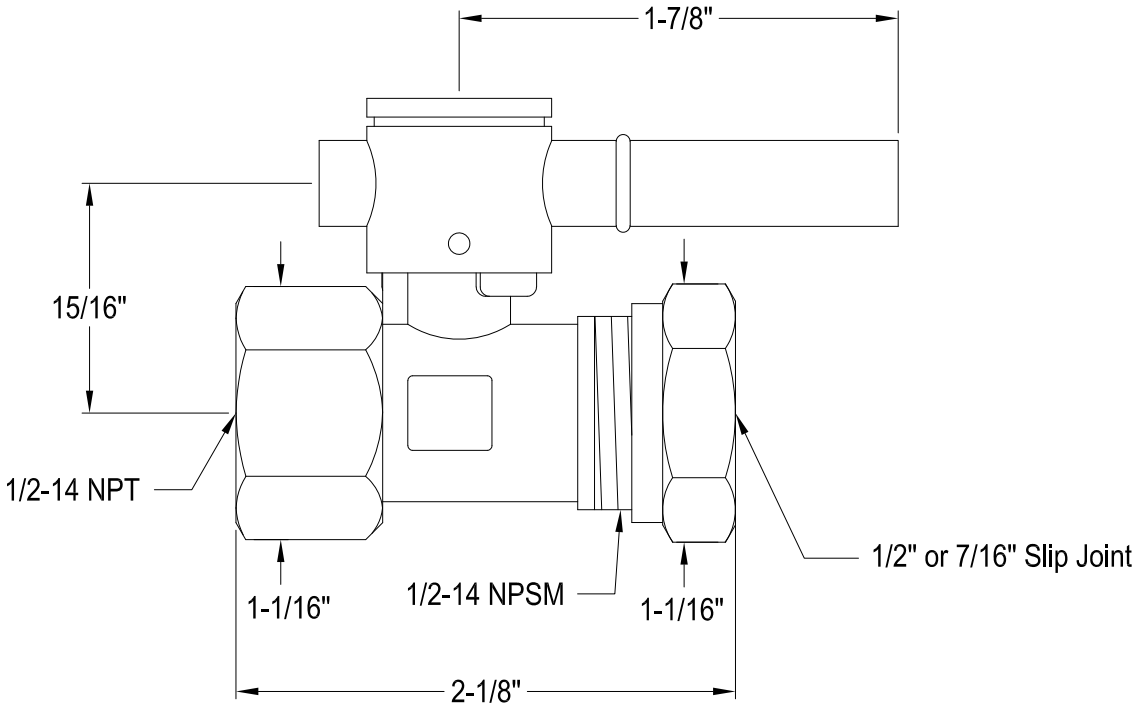
Quarter Turn Valves, 1/2" FIP x 1/2" or 7/16" Slip Joint