NB3630PL
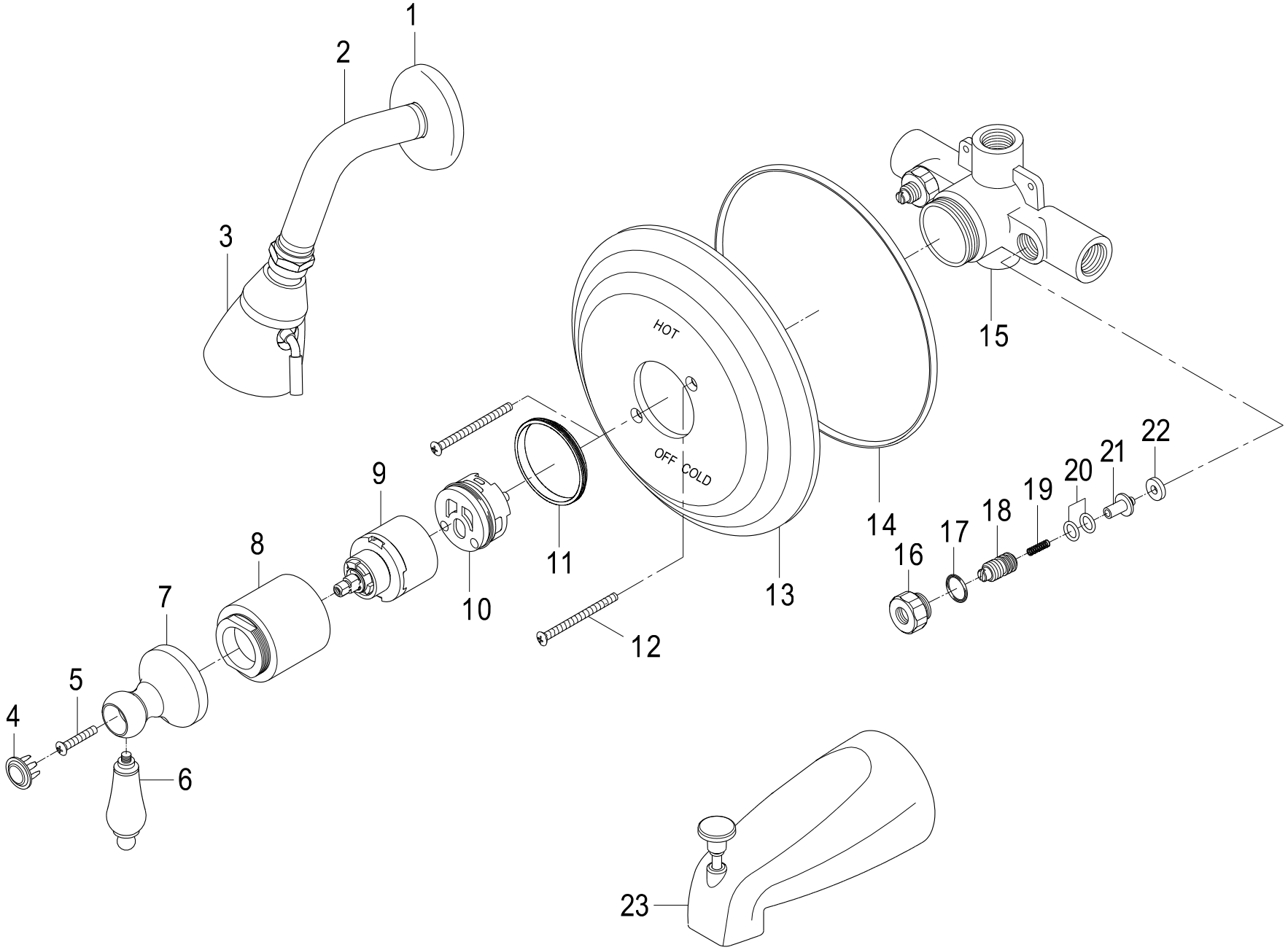
Single Handle Pressure Balanced Tub & Shower Faucet