KINGSTON

TO ORDER PARTS, CALL: 1-877-252-7277
www.kingstonbrass.com

LS2730,1,3,4,5,6,8KL,KLAB,KLBG,KLRG

Single Handle Pull-Down Kitchen Faucet

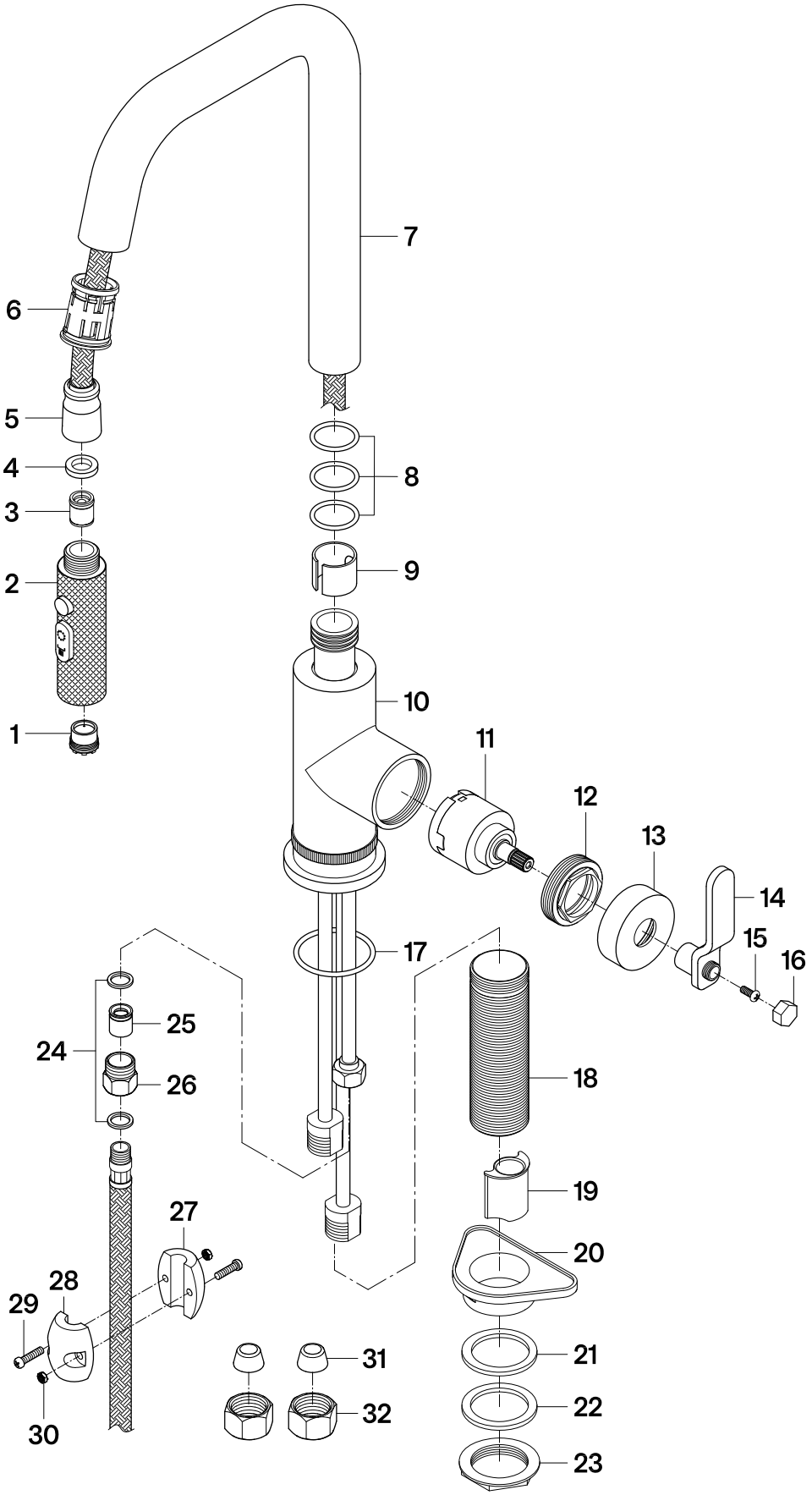

2026-03-A