KSH4641,2,4,5,7,8,9EX
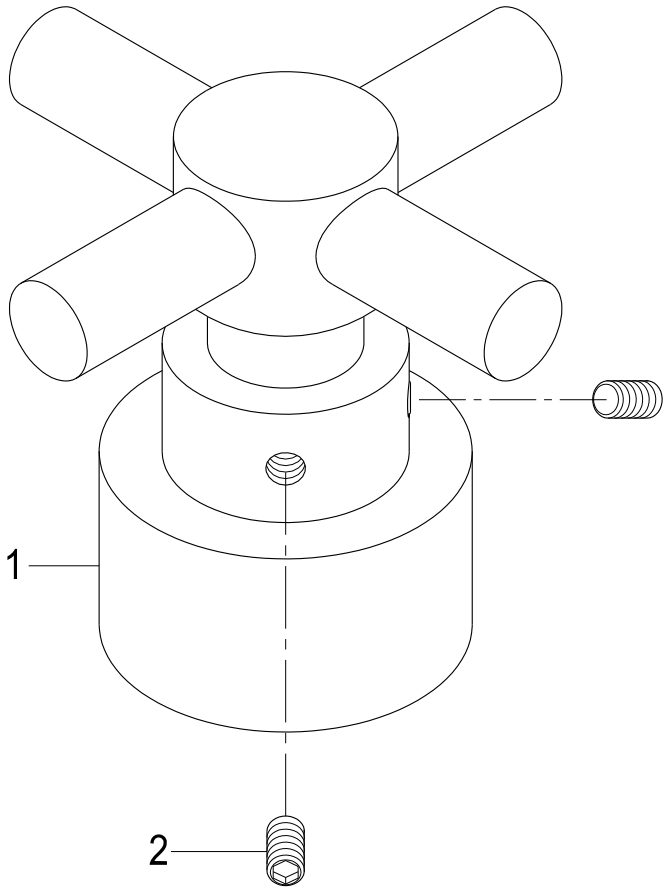
Cross Handle