KS7120,1,2,3,5,6,7,8GL
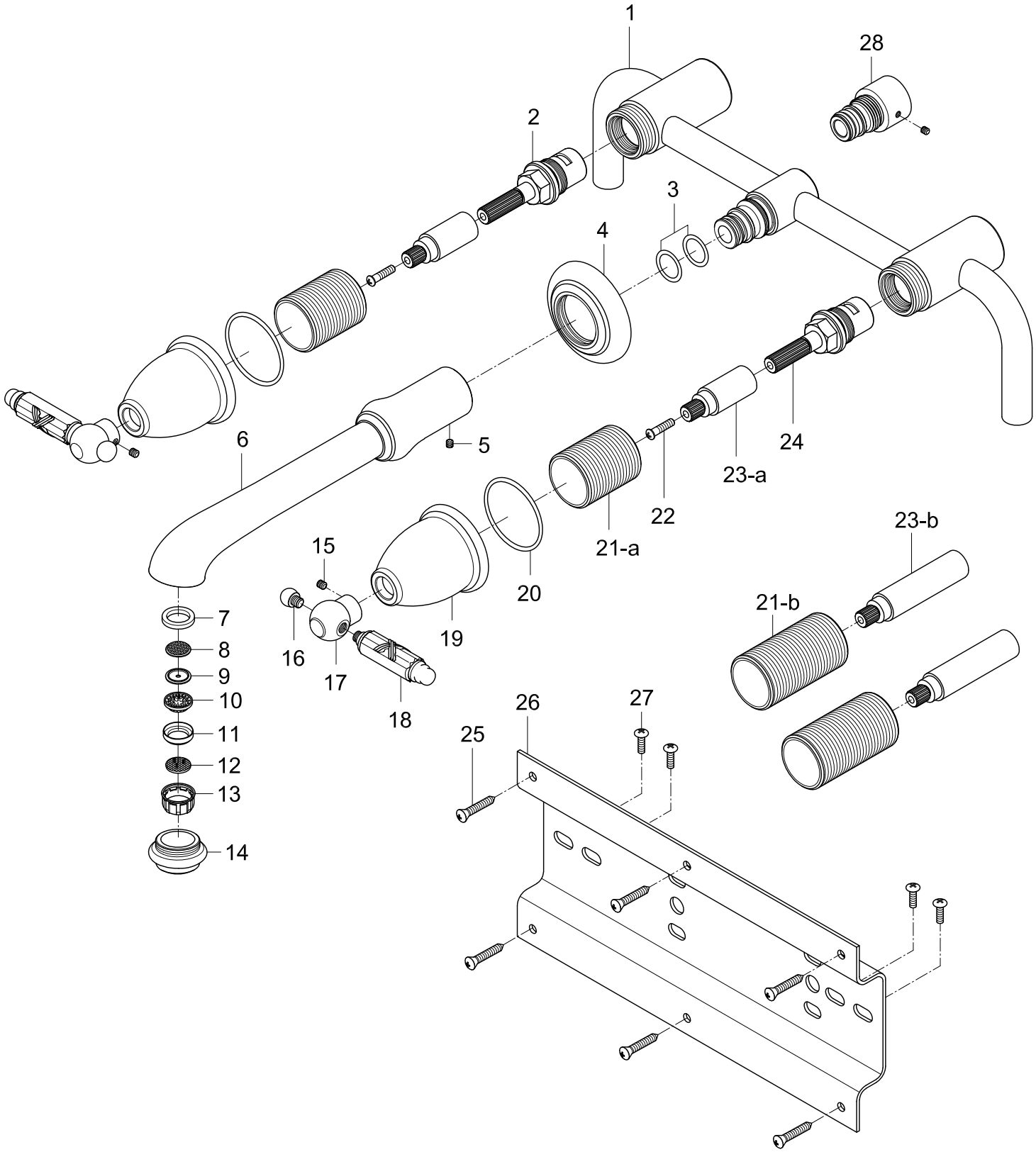
Twin Handles Wall Mount Bathroom Faucet