KS4461,2,5,8WCL

Widespread Lavatory Faucet With Brass Pop-Up

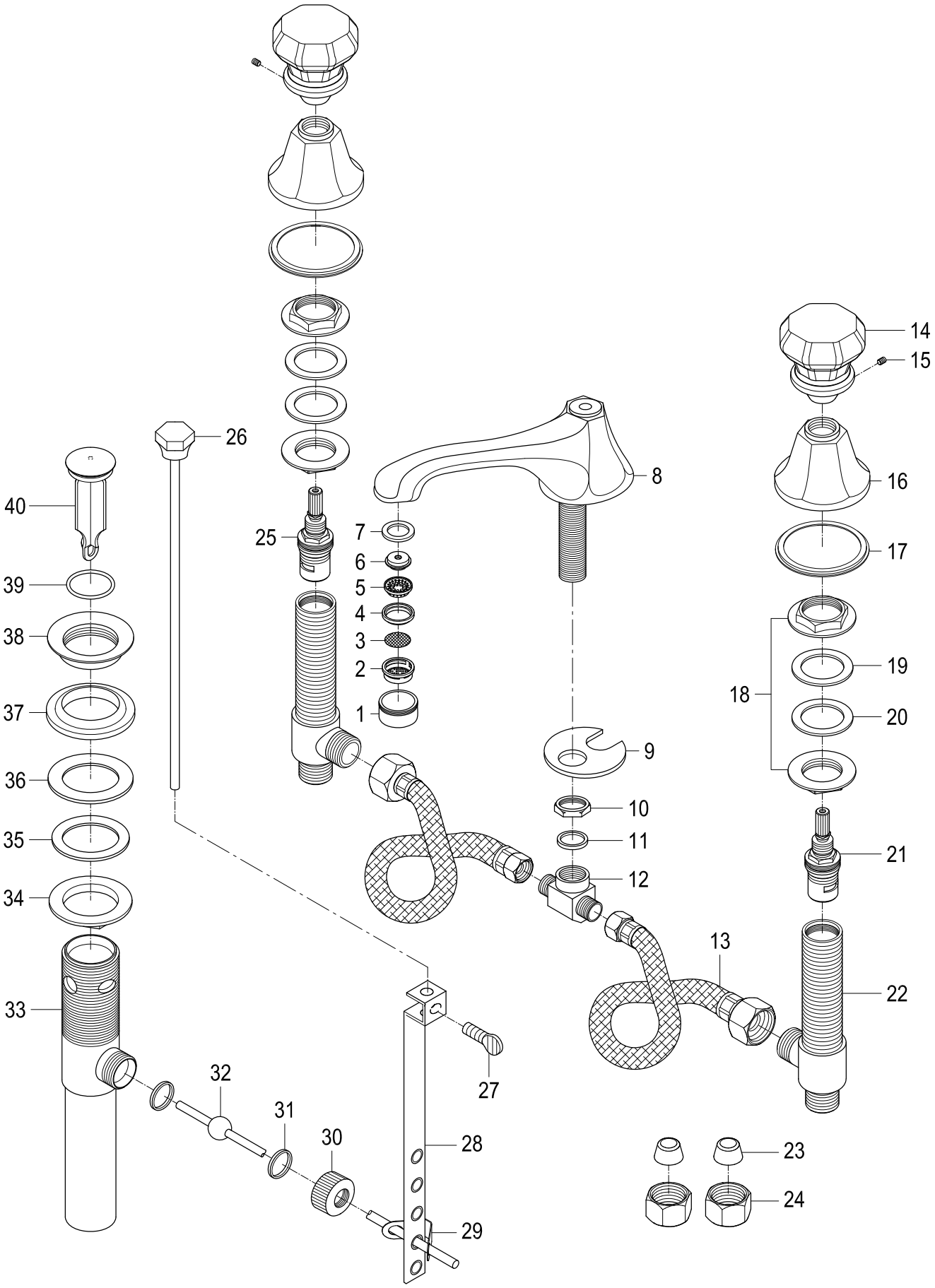

Ref# KS4461,2,5,8WCL | 2021-04-C