KB8698DFL
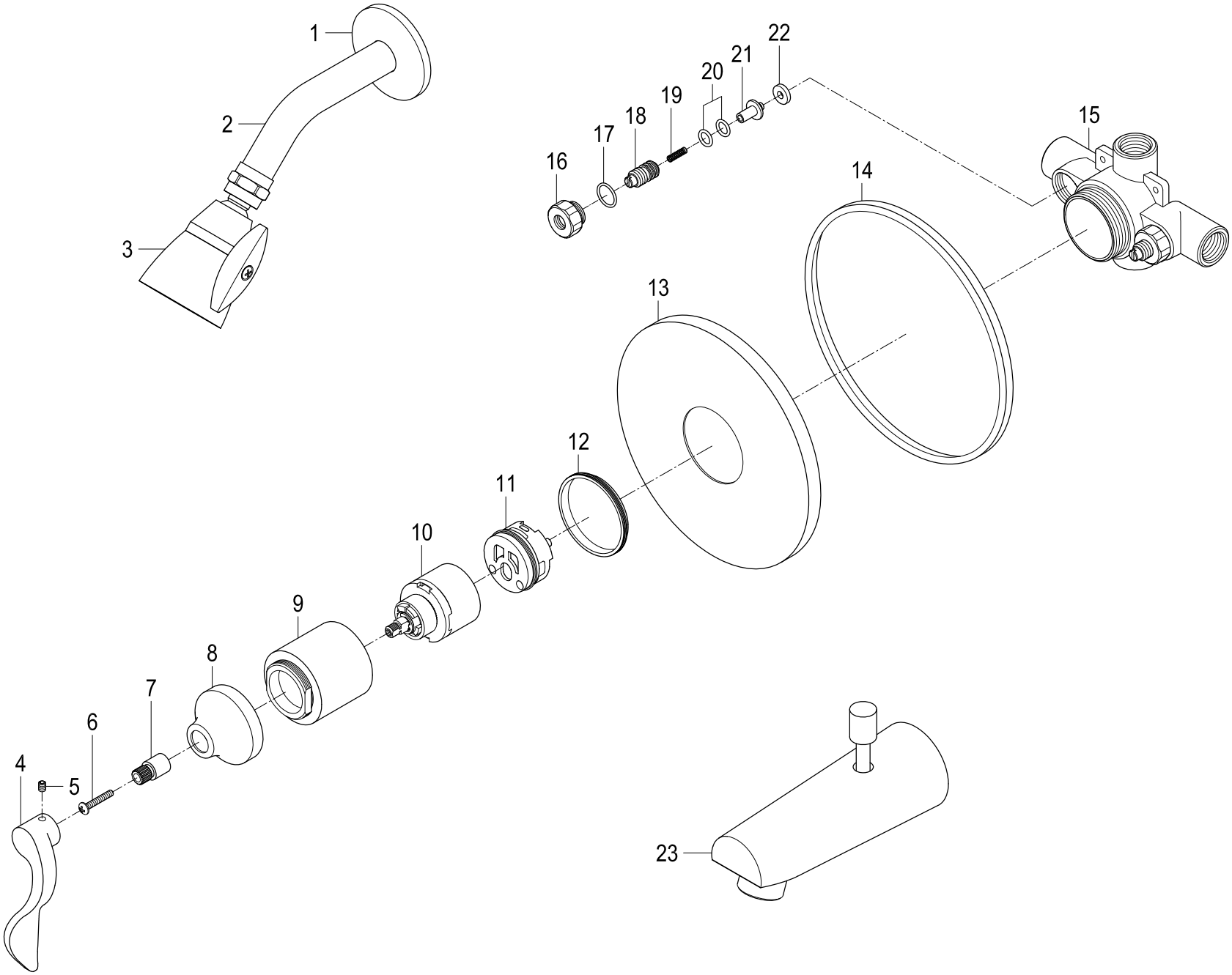
Single Handle Pressure Balanced Tub & Shower Faucet