KB6140,2,3,7,8CML
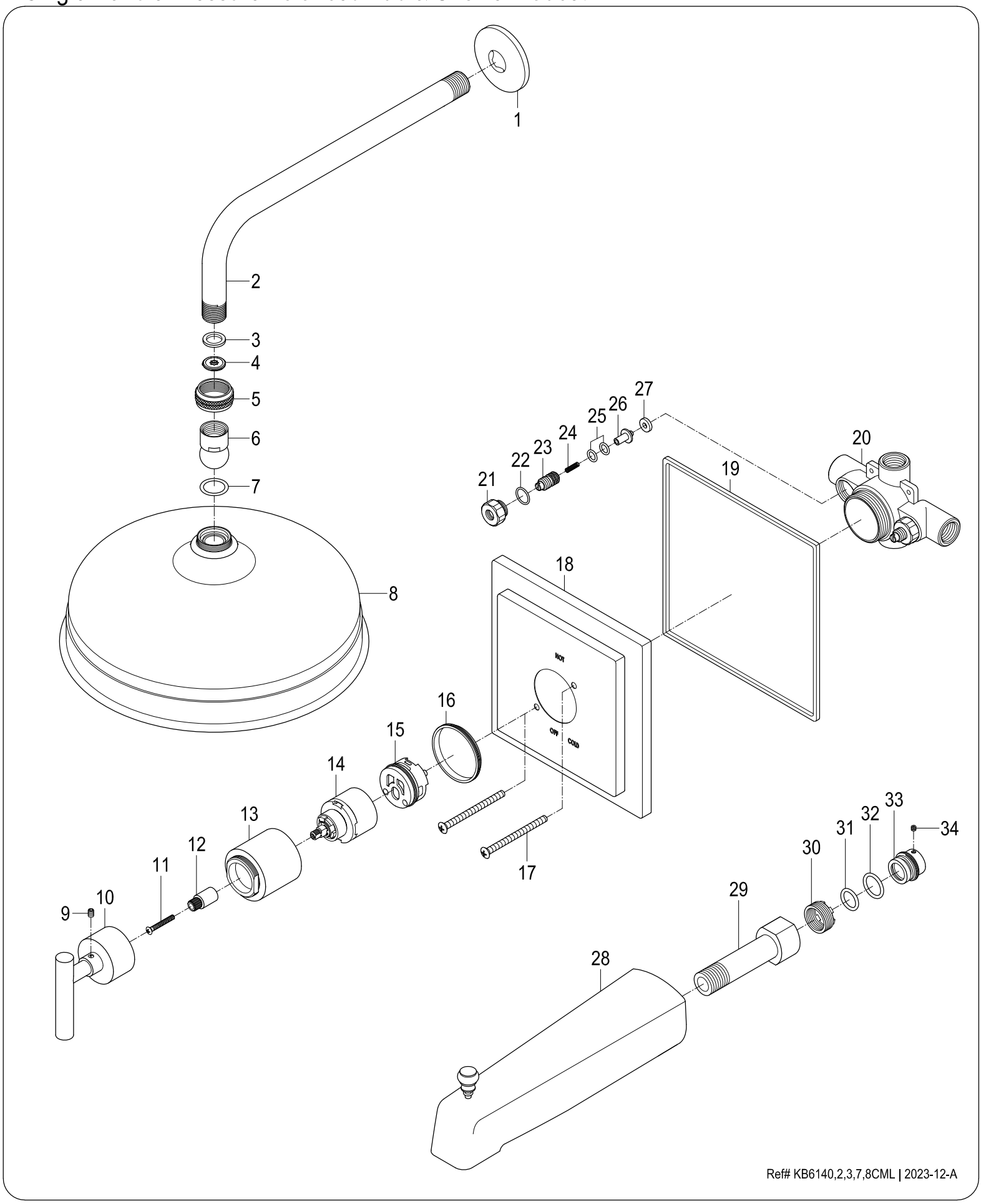
Single Handle Pressure Balanced Tub & Shower Faucet