KB120P
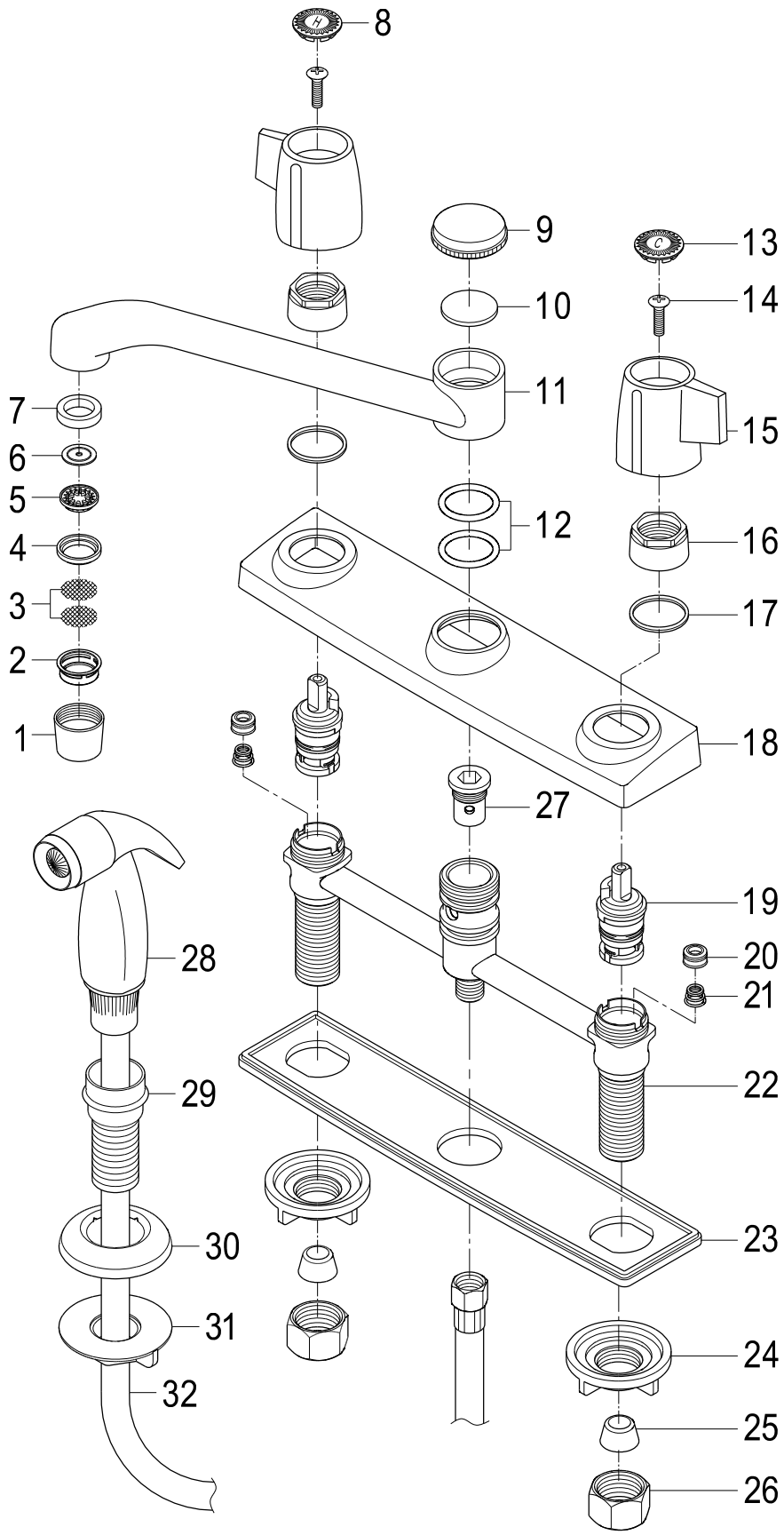
Twin Handles 8" Centerset Kitchen Faucet With Sprayer