Parts:

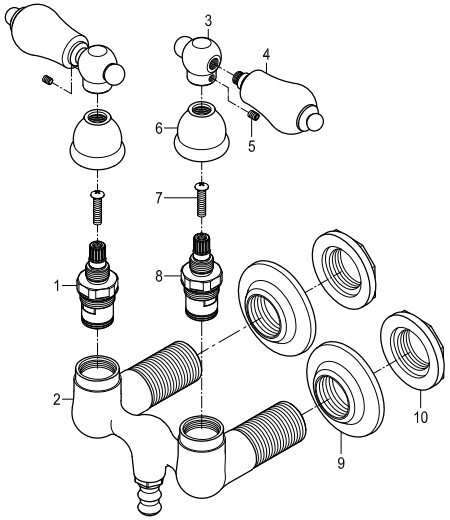

Replacement Parts:

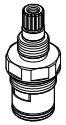

Hot Cartridge: KSRPT1000HC

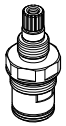

Cold Cartridge: KSRPT1000CC

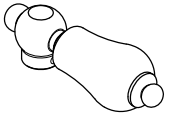

Handle: CCCL1

KINGSTON
KITCHEN & BATH

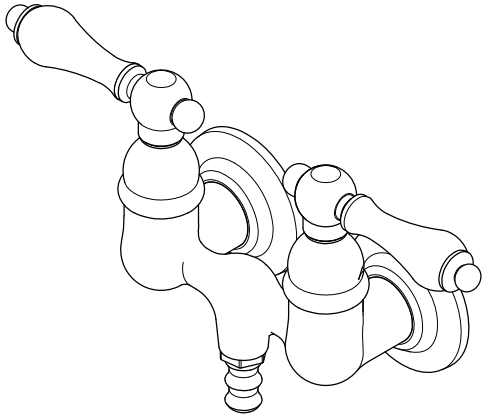

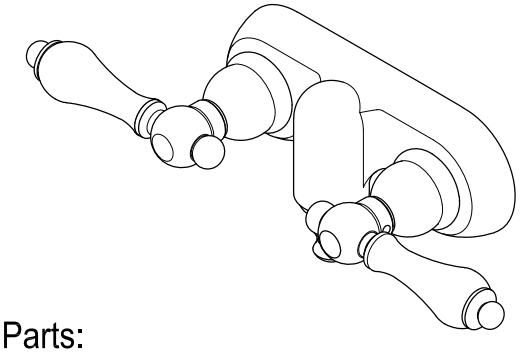

Parts:

Lock Nut	
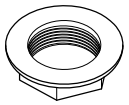 2 Pcs	

www.kingstonbrass.com
TOLL-FREE CUSTOMER SERVICE: 1-877-2-KBRASS
TECHNICAL SUPPORT E-mail: service@kingstonbrass.com
12775 Reservoir Street, Chino, CA 91710

CARE AND MAINTENANCE OF YOUR FAUCET

Your Kingston Brass faucet has been finished to the most strict standards; however, due to the high content of minerals in the water, your finish may appear dull and tarnished after time. These are some do's and don'ts to maintain the luster on your faucet for many years to come.

DO
1. Use a silicon based caulking when installing.
2. Clean your faucet with only a mild soap and water solution.
3. Dry your faucet after using it.
4. Give it a coat of Carnauba Wax periodically.

DON'T
1. Use plumbers putty when installing the faucet.
2. Use any abrasive cleaning agents.

It may seem like a very simple and short list but it is that simple to maintain your faucet, looking shiny and new.

If your faucet is already looking somewhat dull and tarnished, before replacing it, try cleaning it with a 50/50 solution of vinegar and water, you may need to soak some rags and wrap around those stubborn areas, leave overnight and rinse completely in the morning, apply Carnauba wax once you have removed the mineral deposits.

NOTICE

Failure to follow all directions may cause leaks which may result in water damage

⚠CAUTION

Failure to follow all installation directions may cause product to detach from the wall and cause serious injury

KINGSTON
KITCHEN & BATH

INSTALLATION INSTRUCTIONS
Wall Mount Tub Filler

BEFORE BEGINNING INSTALLATION:

1. Flush plumbing lines to clear any debris.
2. Shut off both supply lines after flushing.

Need Tools:

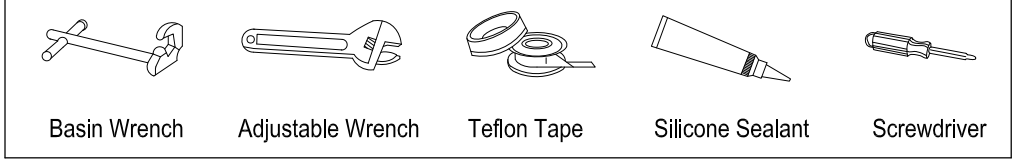

1

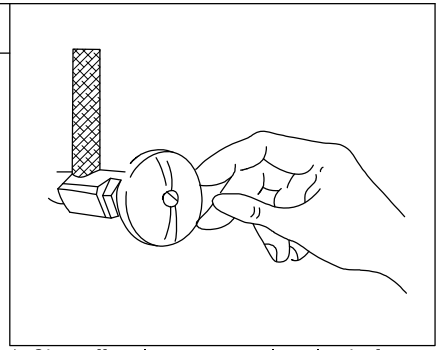

1. Shut off main water supply valve before installation.

2

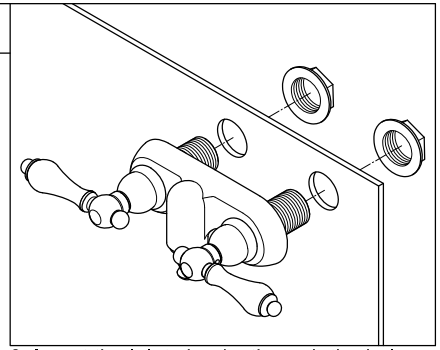

2. Insert the inlet shanks through the holes, and press down. Assemble lock nuts on the inlet shanks, and then tighten the nuts by hand.

3

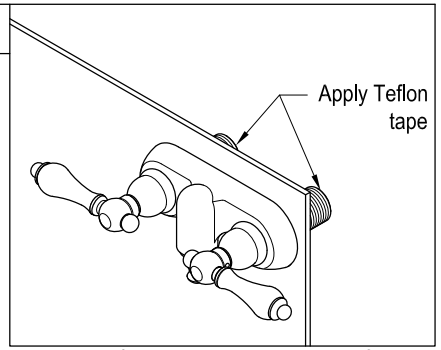

3. Apply Teflon tape on the threads of the copper shank. Install the elbow.

4

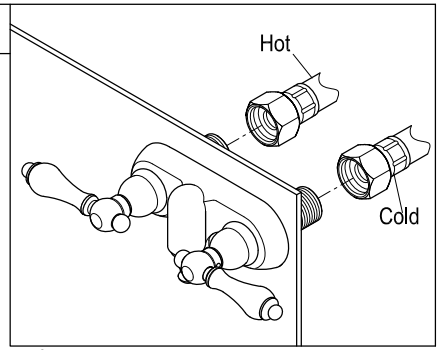

4. Connect water supply shank to hot and cold water supply line.

5

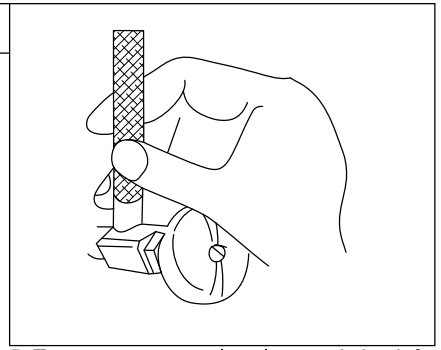

5. Turn on water supply valves and check for leaks, especially all supply line connections.

6

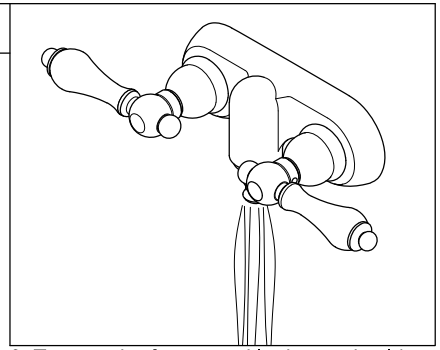

6. Turn on the faucet and let hot and cold water to run for at least one minutes to clean any debris inside the water line.

Warning!!!

- DO NOT STEP ON faucet or supply line installation. This fixture is not a stair to access your storage, window or access higher ceiling. This Cast Brass Faucet cannot support your body weight. To step on faucet will crack the fitting and eventual fracture to cause water damage to your property.
- The faucet was tested and meets ASME/ANSI code on its operation, loading and torque pressure. However this faucet is not designed to support weight over 250 pound per square inch of pressure, DO NOT OVERTIGHTEN. DO NOT APPLY ELECTRICAL TOOL to fasten faucet installation.
- For Exposed tub supply line installation faucet model, your supply lines have to be installed on corner area, or at area with no walking traffic access to cause accidental tamper or accidental breakage. For installation of exposed supply line at open traffic area is prohibited.
- Removal of this tag prior to installation will void your warranty. Pass the WARNING TAG to the owner after installation.

© 2023-06-T Kingston Brass